A. H. SCHERZER.

BASCULE BRIDGE.

APPLICATION FILED JAN. 23, 1911.

1,109,792.

Patented Sept. 8, 1914.

4 SHEETS—SHEET 1.

Fig. 1.

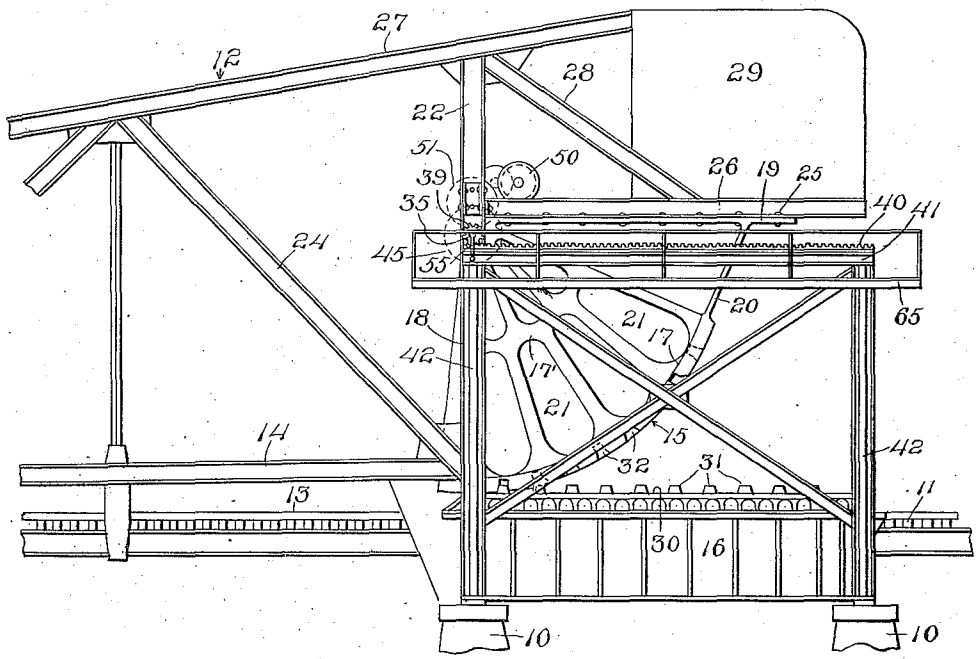

Fig. 2.

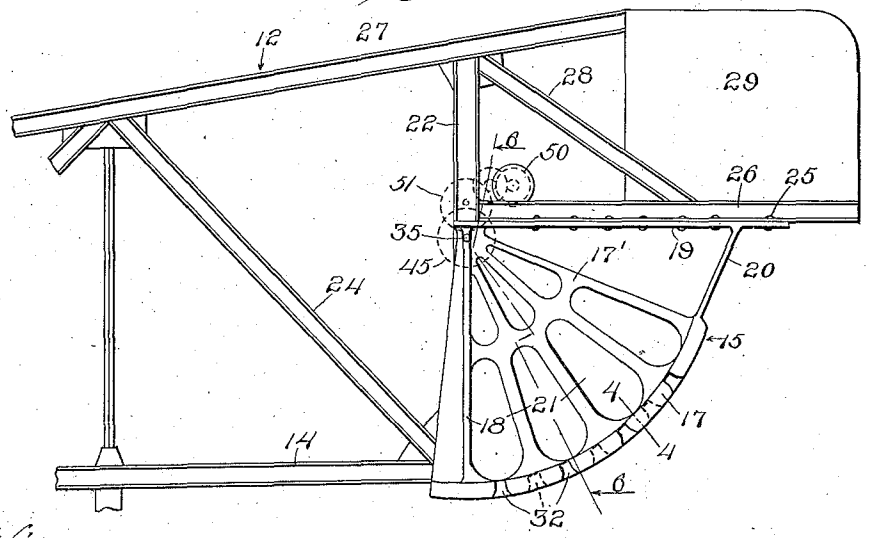

Witnesses:

Harry S. Gaither

William Goldberger

Inventor

Albert H. Scherzer

by William H. Hall

Att'y

A. H. SCHERZER.

BASCULE BRIDGE.

APPLICATION FILED JAN. 23, 1911.

1,109,792.

Patented Sept. 8, 1914.

4 SHEETS—SHEET 2.

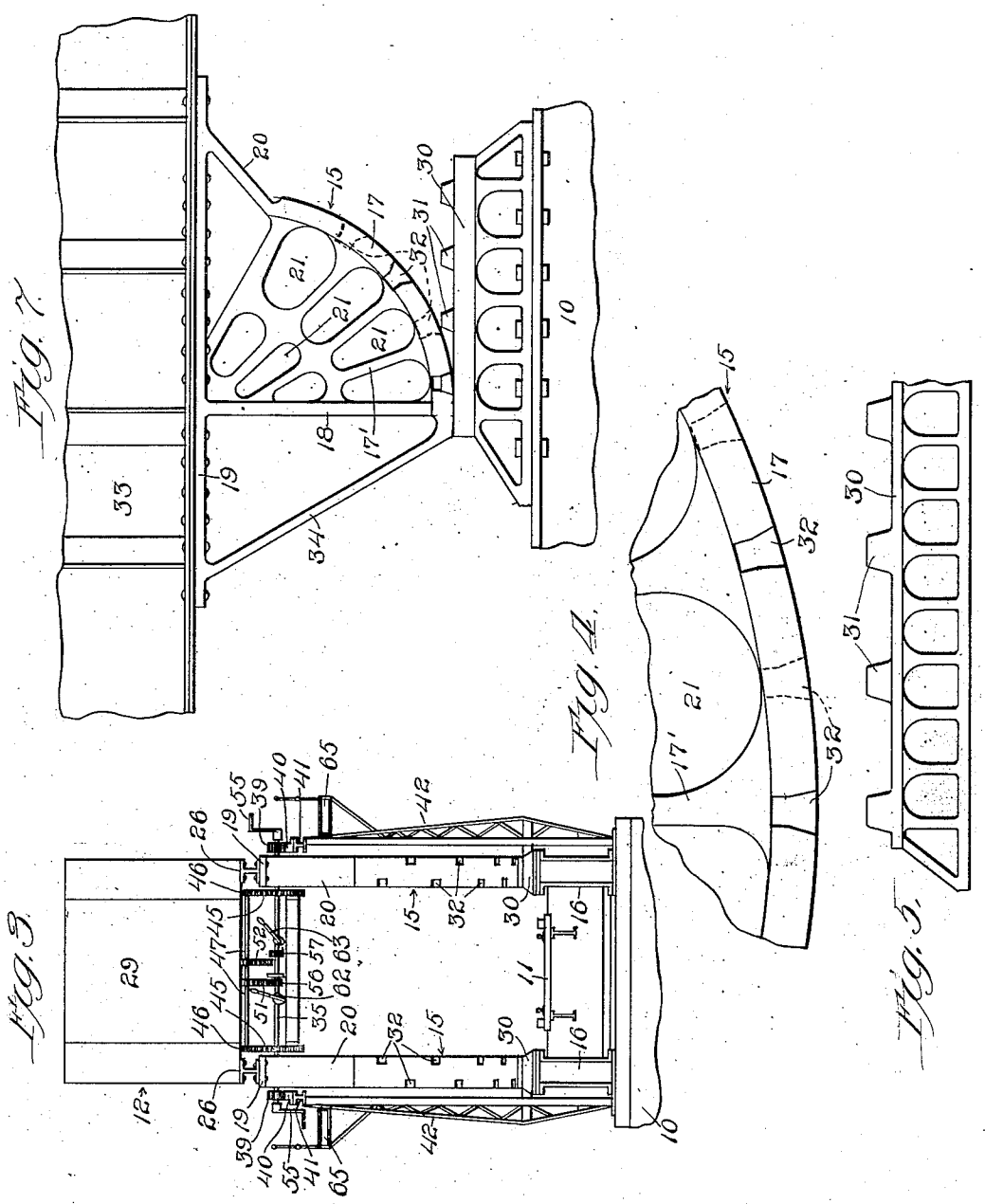

Witnesses:
Harry S. Gaither
William Goldberger

Inventor
Albert H. Scherzer
by William L. Hall
Atty

A. H. SCHERZER.

BASCULE BRIDGE.

APPLICATION FILED JAN. 23, 1911.

1,109,792.

Patented Sept. 8, 1914.

4 SHEETS—SHEET 3.

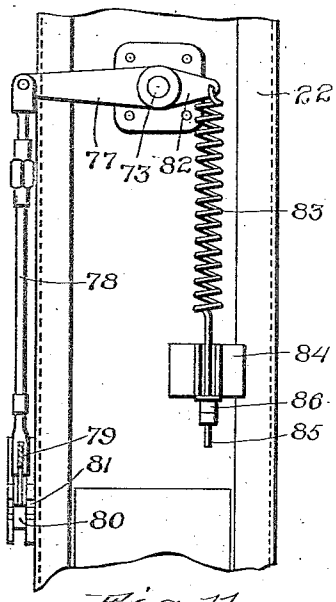

Fig. 11.

Fig. 6

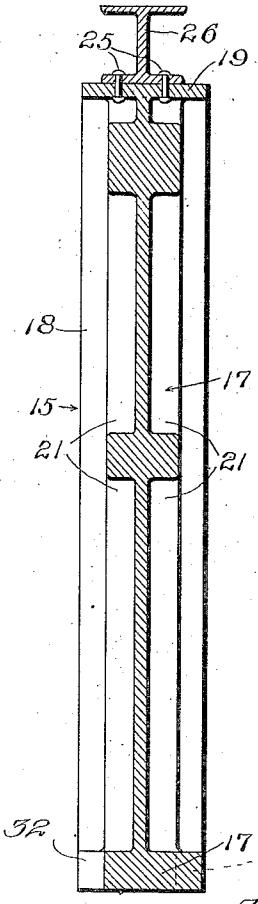

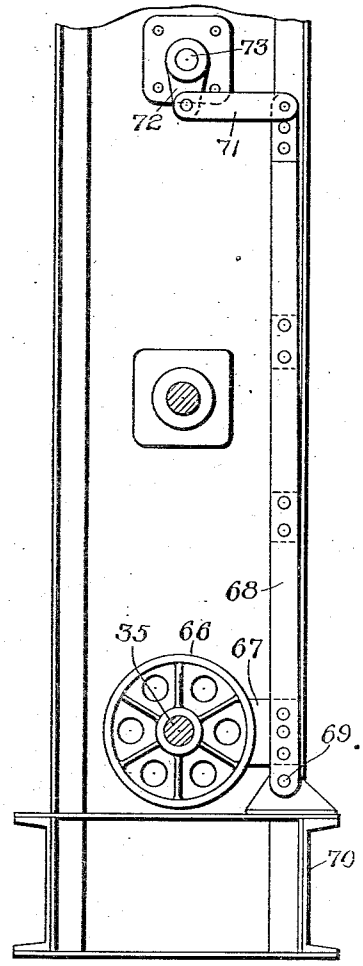

Fig. 12

Witnesses:

Harry S. Gaither

William Goldberger

Inventor

Albert H. Scherzer

by William L. Hall, Atty

A. H. SCHERZER.

BASCULE BRIDGE.

APPLICATION FILED JAN. 23, 1911.

1,109,792.

Patented Sept. 8, 1914.

4 SHEETS—SHEET 4.

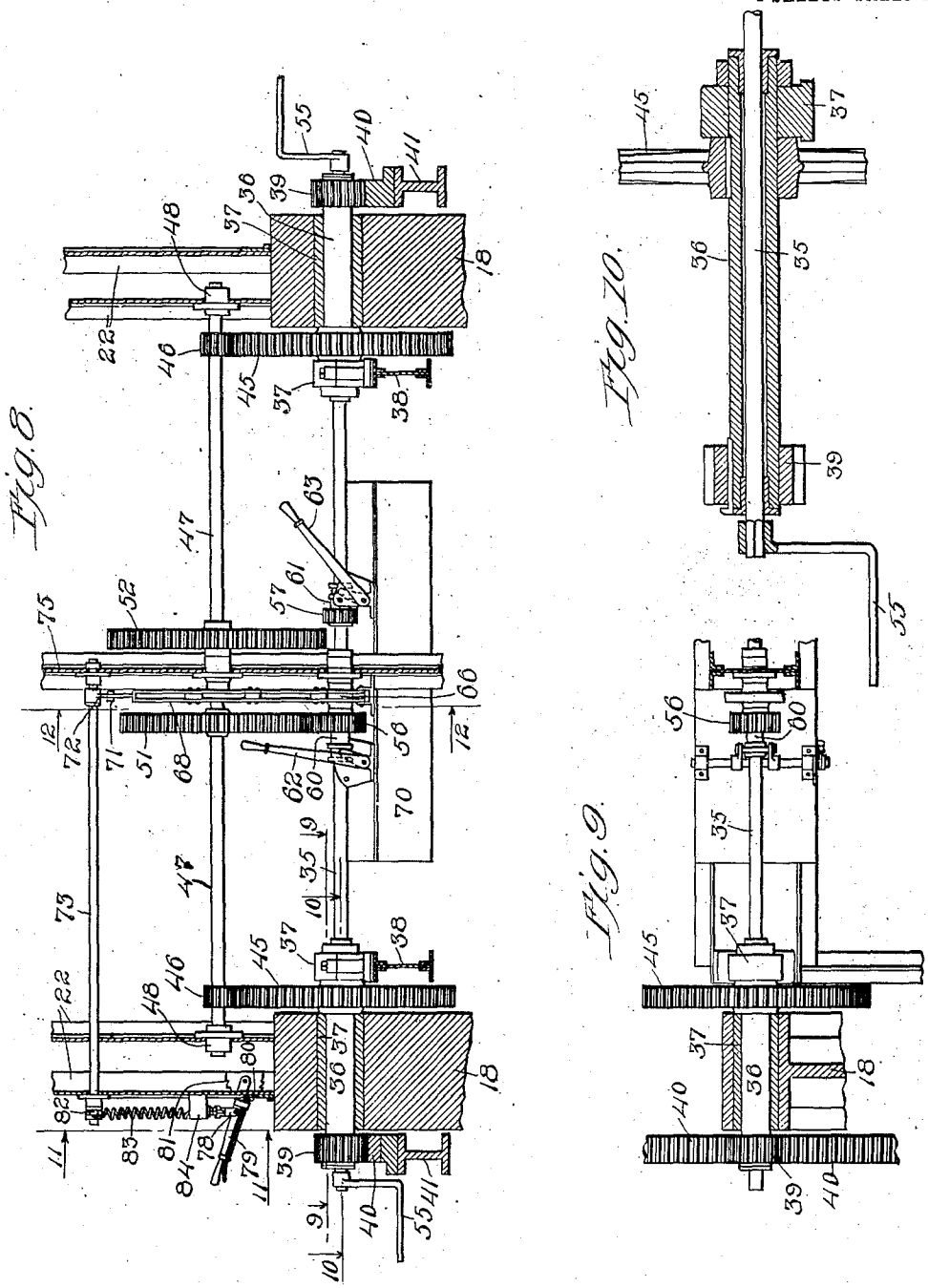

Witnesses:
Harry S. Gaither
William Goldberger

Inventor
Albert H. Scherzer
by William L. Hall,
Atty

UNITED STATES PATENT OFFICE.

ALBERT H. SCHERZER, OF CHICAGO, ILLINOIS.

BASCULE-BRIDGE.

1,109,792. Specification of Letters Patent. Patented Sept. 8, 1914.

Application filed January 23, 1911. Serial No. 604,015.

To all whom it may concern:

Be it known that I, ALBERT H. SCHERZER, a citizen of the United States, and a resident of Chicago, in the county of Cook and State of Illinois, have invented certain new and useful Improvements in Bascule-Bridges; and I do hereby declare that the following is a full, clear, and exact description thereof, reference being had to the accompanying drawings, and to the characters of reference marked thereon, which form a part of this specification.

This invention relates to improvements in bascule or lift bridges of that kind wherein the bridge is opened and closed by the swinging movement of a movable span or spans in a vertical plane, and the invention consists in the matters hereinafter set forth and more particularly pointed out in the appended claims.

The invention refers more specifically to an improved operating mechanism for the bridge, whereby the leaf may be opened and closed by motor or hand power, and to an improved brake mechanism by which to control the opening and closing movements of the leaf.

As shown in the drawings, Figure 1 is a side elevation of the shore end of the bridge leaf and its supporting piers and approach. Fig. 2 is a side elevation of one of the trusses of the leaf, its supporting segment and counterweight. Fig. 3 is an end view of the bridge with parts omitted. Fig. 4 is a sectional detail of the curved bearing member of the supporting segment. Fig. 5 is a side elevation of a form of the track on which the rolling segment rolls. Fig. 6 is a section on line 6—6 of Fig. 2. Fig. 7 is a side elevation of a deck bridge equipped with my improved supporting segment. Fig. 8 is a cross section of the bridge leaf, showing the operating mechanism for opening and closing the bridge. Fig. 9 is a horizontal section on the line 9—9 of Fig. 8. Fig. 10 is a detail section on the line 10—10 of Fig. 8. Fig. 11 is a vertical section on the line 11—11 of Fig. 8, showing a detail of the brake mechanism. Fig. 12 is a vertical section on line 12—12 of Fig. 8, showing another detail of the brake mechanism.

As shown in the drawings, 10, 10 designate the shore piers for the bridge leaf or span. 11 designates the bridge approach supported on said piers. 12 designates as a whole the movable leaf of the bridge.

The bridge illustrated in Figs. 1 and 2 is of that kind known as a "through bridge", it embracing two lateral trusses and a bridge floor 13 supported adjacent to the lower chords 14 of the trusses. The inner or shore end of the bridge leaf is provided with rolling segments 15, 15 which are attached rigidly to and form parts of the trusses of the movable leaf and are adapted to rest and roll on horizontal supporting girders 16—16 located on either side of the approach 11 and supported on the piers 10, 10.

Each of the supporting segments 15 is made of a single or integral cast or pressed steel piece, and comprises a curved bearing member 17 which rests and rolls on the supporting girders 16 and a sector shaped body or web 17′ which is thickened and flanged at its inner side to constitute the strut or compression member 18 of the supporting segment. The said sector shaped body is formed at its upper side with oppositely extending horizontal flanges 19—19 which constitute means by which the supporting segment is attached to the truss structure. The outer side of the web or sector shaped body is thickened and flanged at 20 to constitute a continuation of the curved bearing member 17 of the supporting segment to stiffen the body and connect the bearing member with the attaching flanges 19. The sector shaped web or body portion of the supporting segment is cored out, as indicated at 21 to lighten the same. The vertical strut member 18 of the segment is placed in the truss in vertical alinement with the strut member 22 of the truss, and is attached to the lower end of said strut member 22 by any suitable rigid fastening means. The lower chord 14 and the oblique brace member 24 of the truss are rigidly fastened to each other and to the foot of the thickened or strut member of the one piece supporting segment by any suitable attaching means. The attaching flanges 19 of the upper side of the supporting segment are fastened by bolts 25 to a horizontal girder 26 which constitutes part of the truss, and which is attached at its forward end to the strut member 22 and extends rearwardly therefrom, and is braced from said strut member and the upper chord 27 of the truss by means of the oblique brace member 28. Supported

from the girders 26 of the trusses and the upper chords thereof, and extending between and rigidly connecting the trusses, as herein shown, is a counterweight box 29 which is weighted to counterbalance the bridge leaf and by which the leaf is counterbalanced to facilitate the opening and closing movements of the bridge.

The bearing members 17 of the supporting segments and the supporting girders 16 are provided with interfitting parts to prevent the displacement of the bridge structure on said girders. As herein shown the girders are surmounted by track members 30, which may also be made of cast or pressed steel, and said track members are provided with upwardly extending lugs 31, and the bearing members of the supporting segments are provided with corresponding notches 32 which are adapted to engage over said lugs as the segments roll on the track members. The said lugs are rounded on their upper ends and the notches are correspondingly flared at their lower sides so as to insure the entrance of said lugs into said notches. The lugs 31 of the track members and the interfitting notches in the bearing members of the supporting segments may be staggered or arranged out of line with each other, as indicated in Figs. 3, 4 and 5.

In Fig. 7 I have shown the application of my improved one piece segment to a deck bridge, wherein the segments are located wholly beneath the floor of the leaf 33. The supporting segment 15 shown in Fig. 7 embraces also an integral brace member 34 which corresponds to the separately formed brace member 24 of the truss shown in Figs. 1 and 2.

The operating mechanism by which the bridge leaf is opened and closed is herein shown as constructed and arranged to be actuated by either motor or manual power. Said mechanism is made as follows: 35 designates a hand operated shaft which extends transversely across the leaf and is carried by the upper ends of the strut members 18 of the supporting segments, said shaft being located at the center of roll of the supporting segments. Said shaft 35 is rotatively mounted at its ends in tubular operating shafts 36, which latter are rotatively mounted in bearings 37, 37 carried by the upper ends of the strut members 18 of the supporting segments and horizontal beams 38 arranged laterally inside of said segments. Keyed to the outer ends of said operating shafts 36 are pinions 39, 39 which mesh with racks 40, 40 on horizontally arranged, stationary operating struts 41, 41 that are supported on the upper ends of columns 42, 42 which are attached at their lower ends to and rise from the supporting girders 16. Fixed to said operating shafts just inside of the trusses are large gear wheels 45, 45 which mesh with pinions 46, 46 that are mounted on the opposite ends of a motor driven shaft 47. Said shaft 47 is mounted at its ends in bearings 48 carried by the strut members 22 of the truss structure. Said shaft 47 is operated by an electric motor 50 (Figs. 1 and 2) that is geared to one of two gear wheels 51, 52 carried by said shaft 47 near the center line of the bridge. The motor operates through the shaft 47, the pinions and gears 46, 45, and operating shafts 36 to turn the pinions 39, and the rotating pinions coöperate with the racks of the stationary struts to give rising and falling movement to the bridge leaf in the same manner as in the construction shown in the prior patent to Keller, No. 752,563. The ends of said shaft 35 are squared to receive hand cranks 55 by which said shaft may be rotated by manual power. The said shaft 35 is provided near the center line of the bridge with pinions 56, 57 adapted to mesh, respectively, with the gear wheels 51, 52 of the motor shaft, whereby manual power applied to said shaft 35 may be transmitted through the motor shaft and thence through the pinions 46, 46 and the gear wheels 45, 45 to the operating shafts 36, 36 to rotate the pinions 39, 39 of the rack and pinion operating mechanism. The said pinions 56, 57 and the gear wheels 51, 52 are so proportioned as to transmit the manual driving power to the shafts 36, 36 at greater or less speeds, depending upon the wind pressure against which the bridge leaf is operated. The pinions 56, 57 are mounted to rotate on sleeves 60, 61 which slide on the shaft 35, and said pinions are adapted to be separately or independently slid into and out of meshing engagement with the gear wheels 51 and 52 by the levers 62, 63.

Supported on the columns 42 of the stationary part of the bridge structure at each side of the bridge, and near the level of the stationary girders, are horizontally arranged platforms 65, 65 on which the operatives stand when operating the bridge by hand. To operate the bridge one or more persons, at one or both sides of the bridge, will grasp the hand cranks 55 and turn the same, walking along the platform or platforms 65 to follow the traveling pinions as the latter travel along the racks of the stationary struts 41, and the manual power exerted through said cranks will be transmitted through the mechanism described back to the pinions 39 to rotate the latter on the racks and give rising or falling movement to the bridge leaf to open or close the same.

Referring now to the brake mechanism by which the opening and closing movements of the bridge are controlled, the same is made as follows: 66 designates a brake wheel or drum on the shaft 35 that is engaged by a brake shoe 67 which is fixed to the lower

end of a vertically swinging lever 68 that is pivoted at its lower end at 69 to a horizontal member 70 of the leaf structure. The upper end of said lever is pivotally connected by the link 71 to the crank arm 72 of a rock shaft 73 which is supported in bearings at its inner end in a vertical member 75 of the bridge leaf structure and is supported at its outer end in the strut member 22. Said shaft extends at its outer end beyond said strut member 22 and is provided with a crank arm 77 which is connected by a link 78 with a hand lever 79 that is pivoted to the strut member 22 and is adapted to be locked in adjusted positions by means of a spring pressed, finger actuated pawl 80 which works in a notched sector 81 fixed to the adjacent strut member 22. Rigid with said rock shaft 73 and extending therefrom in a direction opposite to the crank arm 77 is a short crank arm 82 to the outer end of which is connected a brake setting spring 83. The lower end of said spring is attached to a bracket 84 fixed to the outer side of the adjacent strut member 22. The said lower end of the spring terminates in a screw-threaded stem 85, and nuts 86 are screw-threaded to said stem and bear against said bracket and serve to adjust the tension of said spring. The said spring acts to hold the brake shoe up against the brake wheel or drum, and the pressure of the spring may be more or less relieved from the brake shoe to vary the braking effect thereof on the drum by adjusting the lever 79 on the adjusting sector 81.

It will be understood that the structural details of the several features of the invention are capable of considerable variation within the spirit and scope of the invention, and may thus be varied to adapt the same to bridges of varying constructions.

I claim as my invention:—

1. In a rolling lift bridge, a support provided with tracks, a swinging leaf having at its heel end segments which rest and roll on said tracks, racks carried by said support, pinions meshing with said racks, operating shafts rotatively mounted in bearings carried by the leaf and movable with the segments along said tracks, to which shafts said pinions are fixed, a motor driven shaft extending across the leaf and geared to said operating shafts, a manually operable rotative shaft extending across the leaf and mounted in bearings carried by the sides of said leaf and having means to disconnectedly gear it to said motor shaft and operating through the latter shaft to rotate said operating shafts, hand cranks connected to the ends of said manually operable shaft, and fixed platforms adjacent to said cranks and extending parallel to the direction of travel of said hand cranks.

2. The combination with the movable leaf of a bascule bridge, and a support therefor, of racks carried by said support at the sides of the leaf, pinions meshing with said racks, operating shafts rotatively mounted in bearings carried by the sides of said leaf to which said pinions are fixed, a motor driven shaft extending across the leaf and geared at its ends to said pinion shafts and provided between its ends with two gear wheels of different diameters, a manually operable rotative shaft also extending across and movable with the leaf and having bearing in the sides of the leaf, with means to rotate the same, pinions slidable on said latter shaft between the ends thereof, with means to separately engage and lock them in mesh with said gear wheels of the motor driven shaft, and an operator's platform at the side of the leaf adjacent to and elongated in the path of movement of the rotating means for the operating shaft.

3. The combination with the movable leaf of a bascule bridge, and a support therefor, of racks carried by said support at the sides of the leaf, separate, tubular operating shafts rotatively mounted in bearings carried by the sides of the leaf, pinions fixed to said shafts and meshing with and movable along said racks, a hand operated shaft extending across the leaf and rotatively mounted in said tubular operating shafts and provided at its ends with hand cranks, means for gearing said shaft to both of the operating shafts, and a platform carried by said support and extending in the direction of the line of travel of said hand crank.

4. The combination with the movable leaf of a bascule bridge and a support therefor, of a rack carried by said support, a tubular operating shaft rotatively mounted in and movable with said leaf, a pinion fixed to said shaft and meshing with said rack, a second shaft rotatively mounted in said tubular shaft, and gearing between said second shaft and tubular shaft, with motor driven and hand actuable means to separately rotate said tubular operating shaft through said gearing.

5. The combination with the movable leaf of a bascule bridge and means for supporting the same, of a fixed strut provided with a rack, a manually operable shaft provided with a hand crank, a tubular operating shaft in which the manual shaft is rotatively mounted, a pinion fixed to the operating shaft and engaging said rack, a motor shaft geared to said operating shaft, a pinion on the manually rotative shaft, and a gear wheel fixed to the motor shaft with which said latter pinion meshes.

6. The combination with the movable leaf of a bascule bridge and means for supporting the same, of a fixed strut provided with a rack, a manually operable shaft provided with a hand crank, a tubular operating shaft

in which the manual shaft is rotatively mounted, a pinion fixed to the operating shaft and engaging said rack, a motor shaft geared to said operating shaft, a gear wheel fixed to the motor shaft, and a pinion mounted on the manual shaft for meshing engagement with said gear wheel and having means for disconnecting it from said gear wheel.

7. The combination with the movable leaf of a bascule bridge and a support therefor, of racks carried by the support at the sides of the leaf, tubular operating shafts rotatively mounted in bearings carried by the sides of said leaf, pinions on said shafts which mesh with and are movable along said racks, a motor driven shaft geared at its ends to said tubular operating shafts, a manually operable shaft rotatively mounted in said tubular shafts and geared to said motor driven shaft and operating through the latter to rotate said operating shafts and a fixed platform arranged parallel to said racks adjacent the ends of the said manually operable shaft.

8. The combination with the movable leaf of a bascule bridge and a support therefor, of racks carried by the support at the sides of the leaf, tubular operating shafts rotatively mounted in bearings carried by the sides of said leaf, pinions on said shaft which mesh with and are movable along said racks, a motor driven shaft extending across said leaf and geared at its ends to said operating shafts, a manually operable shaft also extending across the leaf and rotatively mounted in said operating shafts, change speed gearing between the manually operable shaft and the motor driven shaft arranged to vary the hand driven speed of the gears, a hand crank fixed to the manually operable shaft, and a platform parallel with said racks carried by the support adjacent to said hand crank.

9. In a bascule bridge the combination with the movable leaf thereof, a support therefor, and operating means for opening and closing the bridge embracing a rotative shaft provided with a brake drum, an adjustable spring pressed brake member engaging said shoe, operating to maintain a normally constant pressure of the shoe against said drum and operating means for said brake member extending laterally to the side of the bridge and there provided with means for adjusting the pressure of said spring against said shoe.

10. The combination with the swinging leaf of a bascule bridge, a fixed support therefor, and racks carried by said support at the sides of the leaf, of operating shafts rotatively mounted in the leaf, pinions fixed to said operating shafts and meshing with said racks, a motor driven shaft extending across and rotatively mounted in said leaf and geared at its ends to said operating shafts, a manually operable shaft rotatively mounted in said leaf and geared to said motor driven shaft whereby the bridge leaf may be manually controlled through said motor driven and said operating shafts, and a brake mechanism applied to said manually operable shaft and acting with a normally constant pressure thereon to control the swinging movment of the leaf.

11. The combination with the swinging leaf of a bascule bridge, its support and operating mechanism for opening and closing the bridge embracing a rotative shaft extending transversely across the bridge with means to operate the same, of a brake mechanism embracing a drum carried by an intermediate part of said shaft, a brake shoe engaging said drum, and spring pressed means acting to normally press the shoe with a constant pressure against said drum, with means to vary the tension of said spring.

In testimony, that I claim the foregoing as my invention I affix my signature in the presence of two witnesses, this 18th day of January A. D. 1911.

ALBERT H. SCHERZER.

Witnesses:
F. F. Soule,
Wm. L. Hall.