J. L. HARRINGTON.

LIFT BRIDGE.

APPLICATION FILED OCT. 14, 1910.

1,027,477.

Patented May 28, 1912.

4 SHEETS—SHEET 1

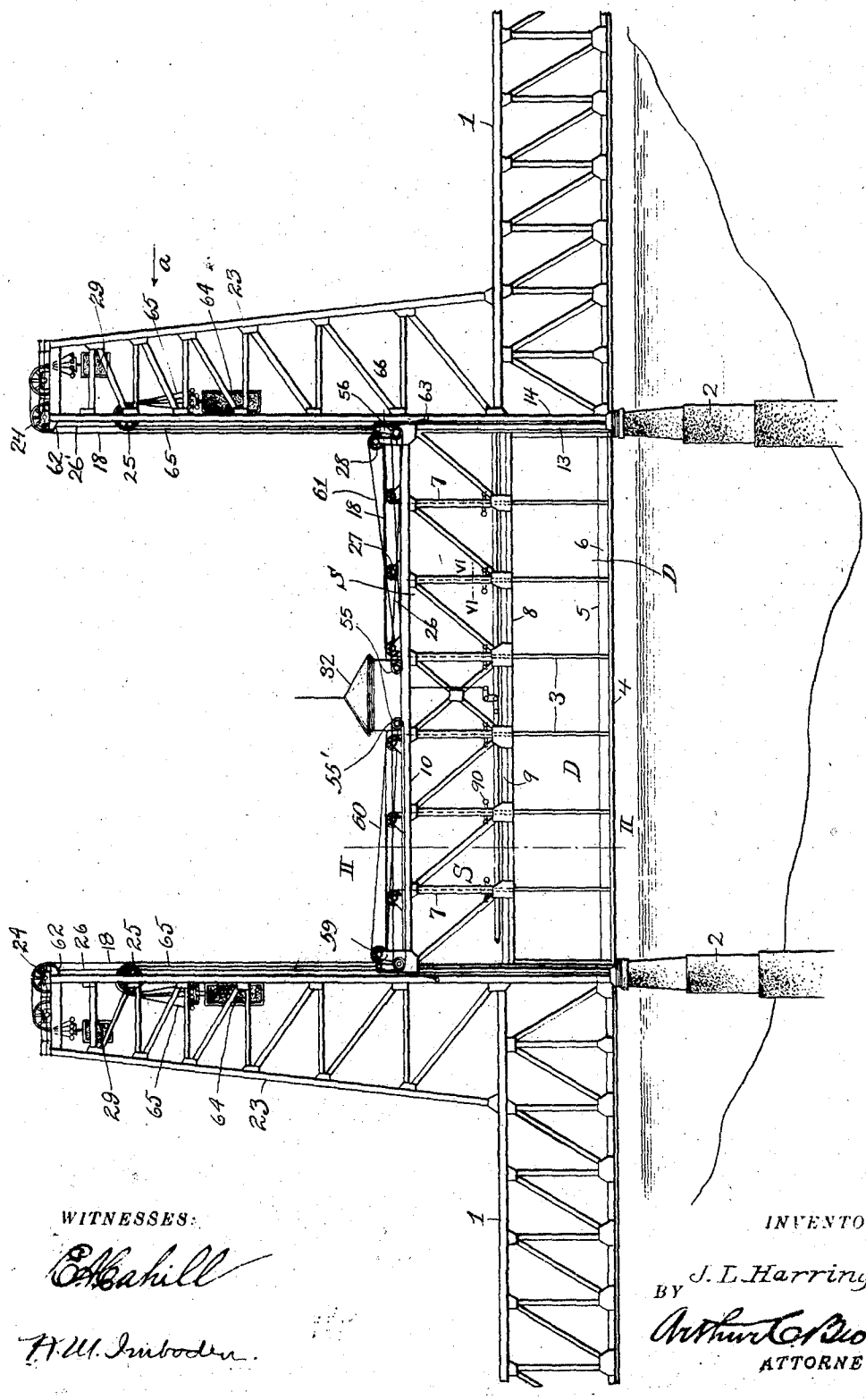

FIG. I.

WITNESSES:

E. E. Cahill

H. M. Imboden.

INVENTOR.

BY J. L. Harrington,

Arthur C. Brown

ATTORNEY.

J. L. HARRINGTON.

LIFT BRIDGE.

APPLICATION FILED OCT. 14, 1910.

1,027,477.

Patented May 28, 1912.

4 SHEETS—SHEET 2.

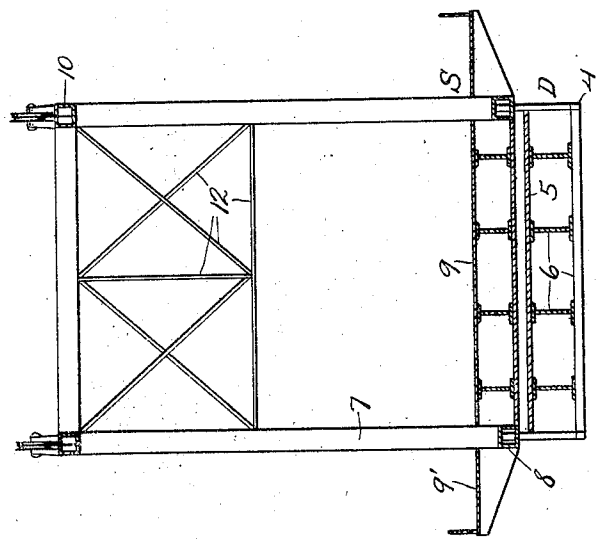

FIG. III.

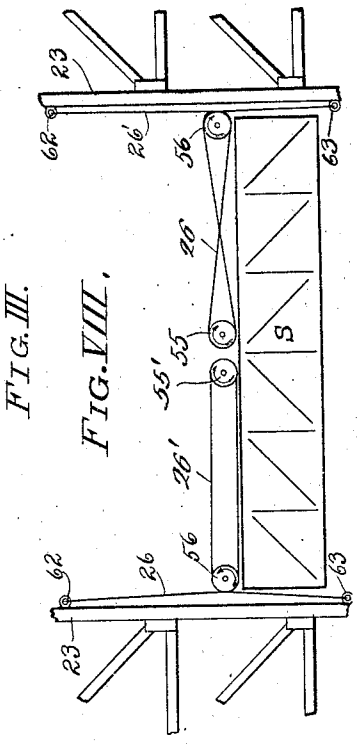

FIG. VIII.

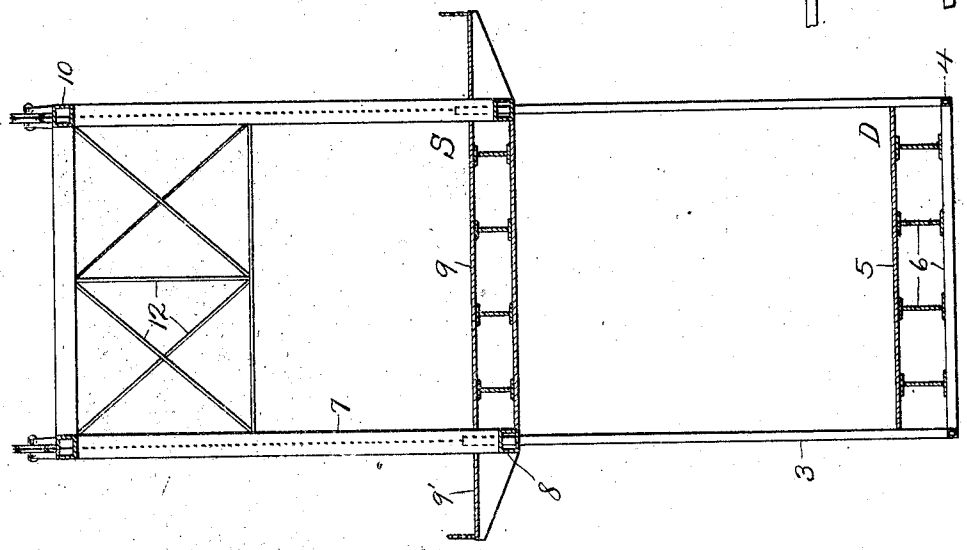

FIG. II.

WITNESSES.

E. E. Lahill

K. M. Imboden

INVENTOR.

J. L. Harrington,

BY Arthur L. Brown

ATTORNEY.

J. L. HARRINGTON.

LIFT BRIDGE.

APPLICATION FILED OCT. 14, 1910.

1,027,477.

Patented May 28, 1912.

4 SHEETS—SHEET 3.

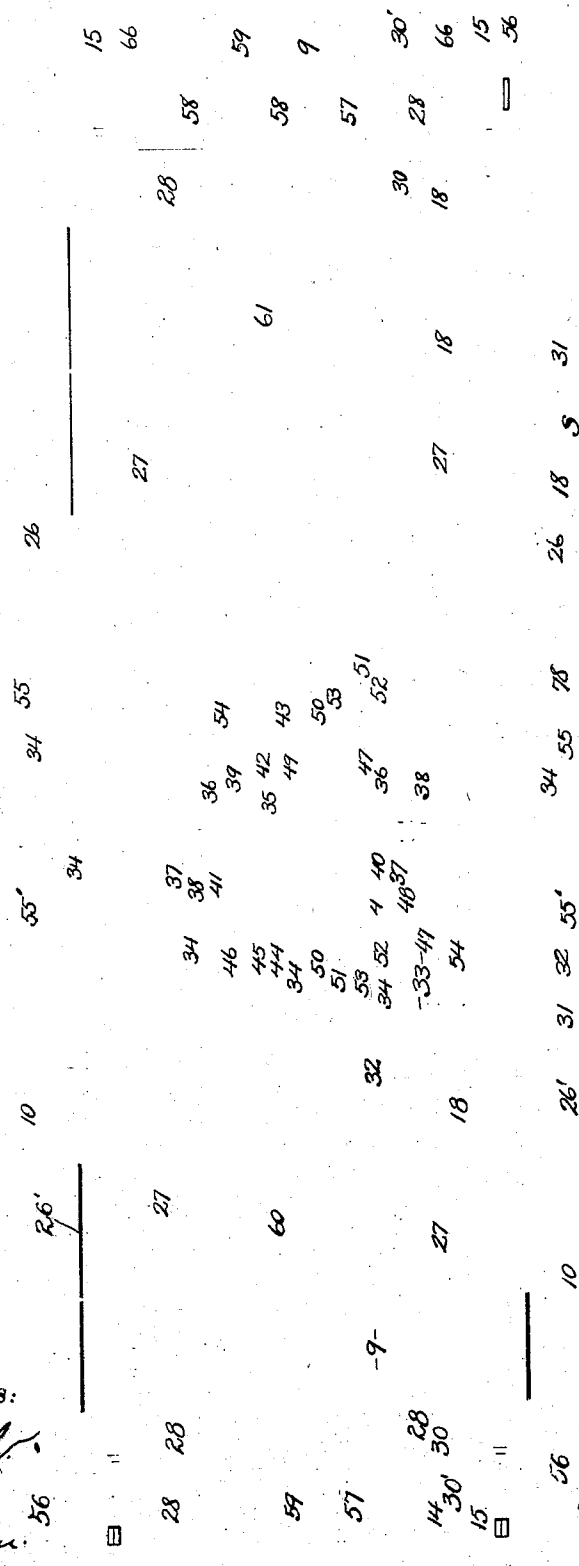

FIG. IV.

WITNESSES:

E. A. Cahill.

K. M. Grabodeu.

INVENTOR.

J. L. Harrington,

Arthur C. Brown.

ATTORNEY.

J. L. HARRINGTON.

LIFT BRIDGE.

APPLICATION FILED OCT. 14, 1910.

1,027,477.

Patented May 28, 1912.

4 SHEETS—SHEET 4.

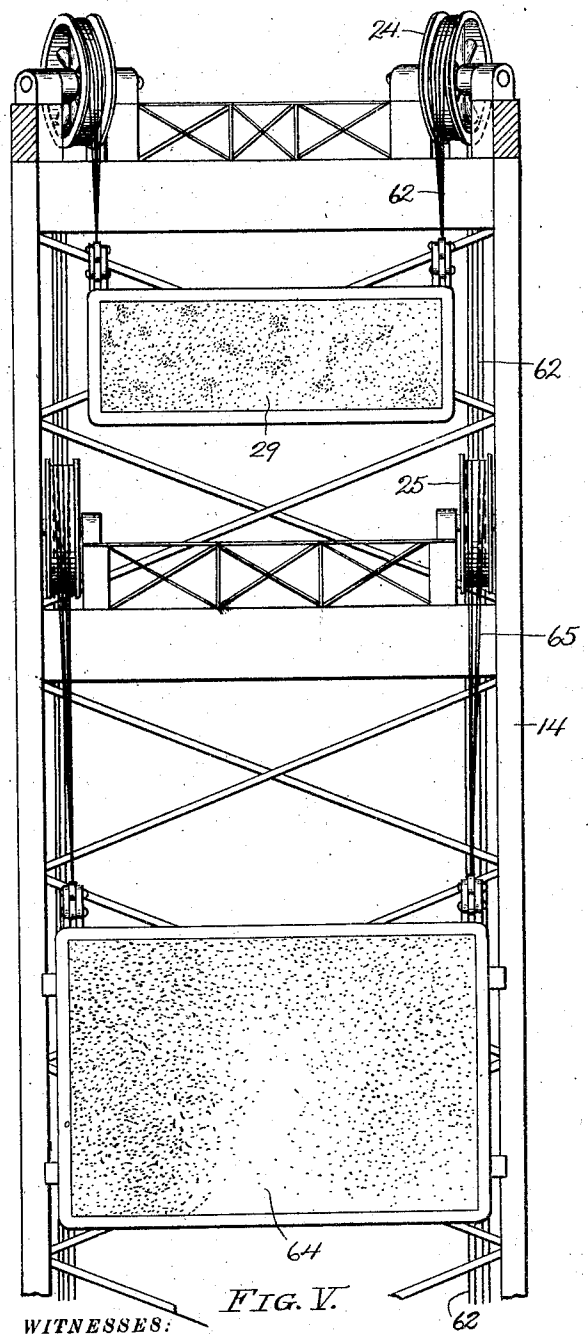

FIG. V.

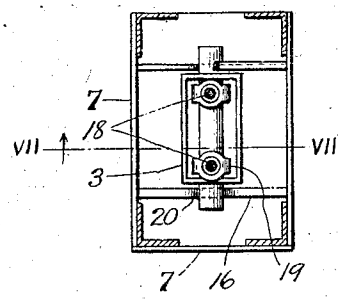

FIG. VI.

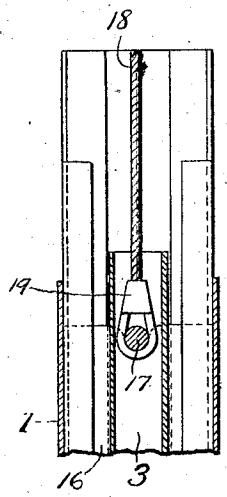

FIG. VII.

WITNESSES:

E. A. Cahill

K. M. Imboden

INVENTOR.

J. L. Harrington,

BY

Arthur C. Brown

ATTORNEY.

UNITED STATES PATENT OFFICE.

JOHN LYLE HARRINGTON, OF KANSAS CITY, MISSOURI.

LIFT-BRIDGE.

1,027,477. Specification of Letters Patent. Patented May 28, 1912.

Application filed October 14, 1910. Serial No. 587,050.

To all whom it may concern:

Be it known that I, JOHN LYLE HARRINGTON, a citizen of the United States, residing at Kansas City, in the county of Jackson and State of Missouri, have invented certain new and useful Improvements in Lift-Bridges; and I do declare the following to be a full, clear, and exact description of the invention, such as will enable others skilled in the art to which it appertains to make and use the same, reference being had to the accompanying drawings, and to the letters and figures of reference marked thereon, which form a part of this specification.

My invention relates to double deck lift bridges; and has for its principal object to provide a lift bridge characterized by a main lift span having a traffic deck, a lower deck suspended from the main lift span, and motor driven means for raising and lowering the lower deck while the main span is stationary, thus retaining in service the traffic deck of the main span while the lower deck is raised to permit passage of vessels.

A further object is to provide simple mechanisms by which both said deck and span may be raised simultaneously to afford greater vertical clearance and to permit the passage of tall masted vessels under the bridge.

These and other desirable objects are attained by the construction illustrated in the accompanying drawings, in which:—

Figure I is a side elevation of a bridge constructed in accordance with my invention, the main span and lower deck both being in the traffic-carrying position; the sidewalk structure being omitted for greater clearness of illustration. Fig. II is an enlarged cross section of the bridge, viewed on the line II—II of Fig. I, omitting the tower and the locking devices. Fig. III is a view similar to Fig. II, showing the lower deck in raised position relatively to the main span. Fig. IV is a shortened plan view of the main deck, also of the mechanism in the power house, the roof thereof being removed. Fig. V is a sectional elevation of the upper portion of one of the towers, showing the weights, sheaves and cables, viewed in the direction of arrow *a* on Fig. I, omitting the bracing seen on Fig. I. Fig. VI is a detail plan view of one of the locks for the lower deck span, viewed on the line VI—VI of Fig. I. Fig. VII is a vertical section viewed on line VII—VII of Fig. VI. Fig. VIII is a diagrammatic view of the span actuating cables and drums.

Referring more in detail to the parts:— 1 designates the stationary spans, the outer ends of which are supported by the piers 2.

D designates, as a whole, the lower deck, which comprises the suspender posts 3, the deck girders 4, the flooring 5, and the under frame 6.

S designates, as a whole, the main span, which comprises the girders 8, the flooring 9, the top girders 10, the columns 7 connecting said girders, and suitable cross-bracing 12 between opposite columns. When in fully lowered position, the ends of this span rest upon four posts 13, which are set close to and in alinement with the inner tower columns 14; the span being provided, at each end, with lugs 15 that project into the channeled members 14 of the tower columns, as shown in Fig. IV at the left.

The columns 7 of the main span are hollow, and may be either "latticed" or "box" type, and secured within each column are two web-plates 16, which are spaced apart to receive between them the suspender posts 3 of the lower deck. The suspender posts are hollow in section, and secured within the upper end of each, is a heavy pin 17, to which a pair of lifting cables 18 are connected by means of clevises 19, the upper ends of the web-plates 16 being provided with notch seats 20, for receiving the projecting ends of the pin 17. By these devices the lower deck D is supported by the posts 3 and 7 when in its lowest position.

Built upon the tops of the fixed spans 1, are the two towers 23, which support the sheaves 24, and 25, over which the lower deck cables 18 and upper span cables 65 are passed. The lower deck cables 18 extend upwardly through the columns 7, through holes 31 in the top girders 10 of the span S, over sheaves 27, which are mounted on said girders, under drums 28, which are journaled in bearings 30 rising from horizontal plates 30′, secured to the top of the main span S at the four corners thereof, up to and over sheaves 24, and depend within the towers; counterweights 29 being attached thereto, whose combined weight equals that of the lower deck D, while the cables 65, which are connected with the ends

of the upper span S; pass upwardly over the sheaves 25 and down into the towers where they support the counterweight 64.

Built upon the top of the main span S is the power-house 32, having a floor 33 upon which is mounted the mechanism to be described. In Figs. II, III, and IV, numeral 9 designates the floor or deck of the main span, the same being broken out in Fig. IV to permit the full length of the span to be shown on a relatively large scale.

In Fig. IV, 34 designates the bearing of the several shafts, whereof 35 is the motor shaft, provided with two clutches, indicated at 36, whereby it may be coupled to either or both of two motors, 37. Said motors are provided with brakes 38, which may be of the spring-set and electrically-released type, so that the mere opening of the brake circuit will set the brakes, the electrical circuit diagrams not being shown, as these matters are within the knowledge of any electrician. Preferably electric motors are employed, and the controllers thereof located within the house 32, the current being conducted to the power house by any suitable device (not shown).

Keyed on the motor shaft 35 are two pinions 39, 40, which drive, respectively, the gearing for moving the upper span and the lower deck. The pinion 39 meshes with a gear 41, that is connected by a friction clutch 42 with a pinion 43, which meshes with a gear 44 keyed on a shaft 45, on which is keyed a cable drum 46. The other pinion 40 on motor shaft 35 meshes with two gears 47, which are connected by friction clutches, indicated at 48, with pinions 49. Pinions 49 mesh with gears 50, on shafts 51, having pinions 52 which mesh with gears 53 on two shafts 54 which extend from side to side of the house 32 and project through its outer walls. Upon the projecting ends of said shafts are keyed cable drums 55 and 55′. On the drum bearing plates 30′, in alinement with drums 55 and 55′, are sheaves 56.

Drums 28 are keyed in pairs upon two shafts 57, having intermediate bearings 58. Between said bearings 58, on each shaft 57, is a drum 59, which is in alinement with cable drum 46. Said drum has driving connection with one drum 59 by two ropes 60, which are not crossed. Said drum 46 also has driving connection with the other drum 59 by two ropes 61 which are crossed, in order to move this end of the lower deck in the proper direction as indicated in Fig. I. Thus, the large drums 28 are driven by the cables 60, 61, and as these large drums 28 are frictionally engaged by the lifting cables 18 of the lower span, said span may be raised and lowered by the operation of one or both of the motors 37.

The cables 26 and 26′, by which the main span is raised and lowered, are disposed as shown in Figs. IV, I and VIII. The upper end of each of said cables is anchored to the towers 23, at 62. From this point the cable passes down to sheave 56, under same, and horizontally to a drum 55—55′, around which it may be wound a plurality of turns, then passes back to sheave 56, over same, and downwardly to a lug 63 where its end is made fast to the tower.

It is apparent that the cable 26 is crossed, while the cable 26′ is not in order to move both ends of the main span in the same direction when both of the drums 55—55′ revolve in the same direction, as when both are driven from one pinion.

The clutches 42 and 48 permit the motive power to be applied separately to the span or simultaneously to the lower deck. Thus, if it be desired to lift the lower deck D without lifting the main span, the two clutches 48 are opened and the clutch 42 is closed. But if it be desired to lift the main span and the lower deck together, the clutches 48 are both closed, the power is applied to all the cables 26 26′ simultaneously, and the lower deck, which is locked to the main span, is lifted with the main span.

The operation of raising or lowering the main span is as follows:—The bridge tender unlocks the span, closes the clutches 48, and starts the motors 37 in the desired direction. The drums 55 55′ on the respective shafts 54 are thus rotated in the same direction, and drive the cables 26 and 26′ As a cable 26 or 26′ at each corner of the span is anchored at the top of a tower, passed under a sheave 56, around a drum 55 or 55′, over sheave 56 and then anchored to the bottom of the tower, revolution of the drums in one direction will cause one of the cables to be wound on said drums and lift the span by pressure of the cables on the sheaves 56 at the corners of the span, the other cables being paid off as the span rises. Reversal of direction of operation of drums 55 55′ causes a reversal in the actuation of the cables, so that the span is pulled downwardly by one set of cables while the others are in turn paid off the drums 55 55′. The span is counterbalanced by weights 64, suspended from cables 65 which pass over sheaves 25 on the towers 23 and are secured to lugs 66 on the bearing plates 30′.

In practice, four cables 65 will be attached to each corner of the span, and will pass over the tower sheave 25 as clearly shown in Fig. V. The main spans is adapted for either railway or highway traffic; so also is the lower deck D.

When a vessel approaches the bridge, of sufficient height to strike the lower girders 4, but not sufficiently high to strike the main deck or span, the bridge operator opens the main span clutches 48 and closes clutch

42 and starts the motors 37 to raise the lower deck. When the lower deck has been raised to the position shown in Fig. III, or high enough to clear the vessel, the motors are stopped. The vessel passes under the bridge, and the deck is lowered again.

Should the vessel have masts or very tall stacks, so that it will not pass under the main span in its lower position, the bridge operator may first raise the lower deck, then the main span, which latter will carry with it the lower deck. The raising of the main span is initiated by closing the clutches 48; the operation of the cables having been already described.

After the main span has been lowered to its normal position, the clutches 48 are opened, thereby disconnecting the power from the main span cables, and the clutch 42 is closed and the motors continue to run until the lower deck has been lowered, unless it be necessary to hold same in elevated position to permit the passage of other boats.

By reason of the arrangement shown of the motors, gearing and clutches, either one of the motors may be employed for operating the bridge, though it is preferred to operate both motors together. If one motor breaks down or fails to start, the other motor will carry the load. In such a case it is desirable to uncouple the dead motor by opening its clutch 36, thereby reducing the work of the other motor as much as possible.

Hand operated winches may be provided for operating the mechanism when the motors are inoperative.

Having thus described my invention, what I claim as new therein and desire to secure by Letters-Patent is:

1. In a lift bridge, a vertically movable lower deck, a vertically movable span located above the deck, and means for lifting the deck independently of the span.

2. In a lift bridge, a vertically movable upper span, a vertically movable lower deck supported by said upper span, and separate means for lifting the span and deck.

3. In a lift bridge, a vertically movable main span, means for raising and lowering same, a vertically movable lower deck supported by the main span, and means for raising and lowering said lower deck while the said main span is in traffic carrying position.

4. In a lift bridge, a vertically movable main span, means for raising and lowering same, a vertically movable lower deck supported by the main span, and means carried by said main span for raising and lowering said lower deck while the said main span is in traffic carrying position.

5. In a lift bridge, a vertically movable lower deck, and a vertically movable superposed span; the former being movable independently of said superposed span, and means for moving said deck independently of the span or for moving both simultaneously.

6. In a lift bridge, a vertically movable upper span, a vertically movable lower deck supported by said upper span, and separate counterweights for said span and deck, and means for actuating said deck independently of the span, or for actuating both simultaneously.

7. In a lift bridge, a vertically movable main span, means for raising and lowering same, a vertically movable lower deck supported by the main span, separate means for raising and lowering said lower deck while the said main span is in traffic carrying position, and independent counterweights for said span and deck.

8. In a bridge, approaches, each having a lower deck and a superposed deck, spaced towers at the ends of the approaches, a vertically movable main span adapted for joining the superposed decks of the approaches, a separate vertically movable deck adapted for joining the lower decks of the approaches, means for actuating the lower movable deck independently of the main span, and means for actuating the main span.

9. In a bridge, approaches, each having a lower deck, and a superposed deck, spaced towers at the ends of the approaches, a main span adapted for vertical travel between the towers and having the lower limit of its travel in the plane of the upper decks of the approaches, a deck suspended from the main span and adapted for vertical movement between the towers, the lower limit of travel of said movable deck being in the plane of the lower decks of the approaches, and separate means for raising and lowering the span and deck.

In testimony whereof I affix my signature in presence of two witnesses.

JOHN LYLE HARRINGTON.

Witnesses:
MYRTLE M. JACKSON,
ARTHUR W. CAPS.