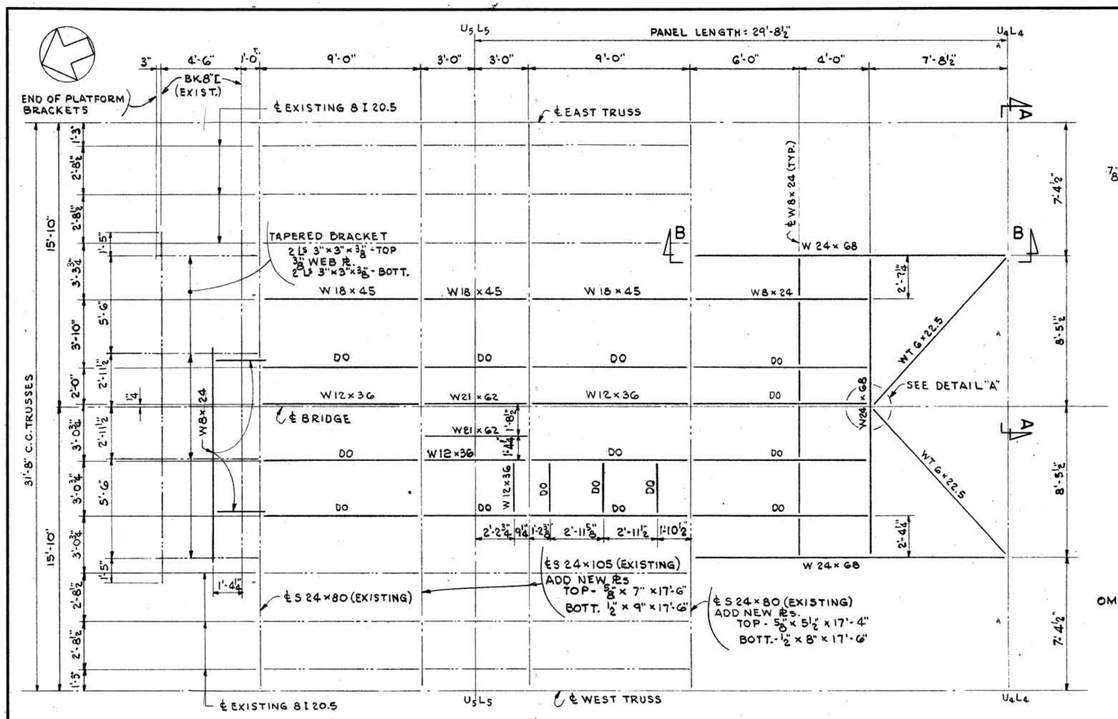

FRAMING PLAN

SCALE: 1/4" = 1'-0"

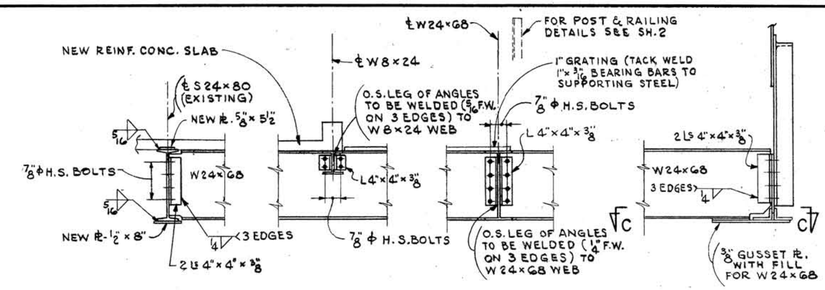

SECTION B-B

SCALE: 1/2" = 1'-0"

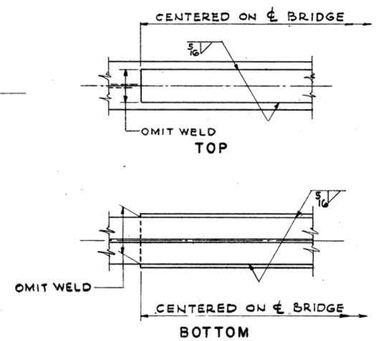

COVER PLATE DETAILS

NOT TO SCALE

(FOR SIZE AND LOCATION OF COVER PLATES, SEE FRAMING PLAN)

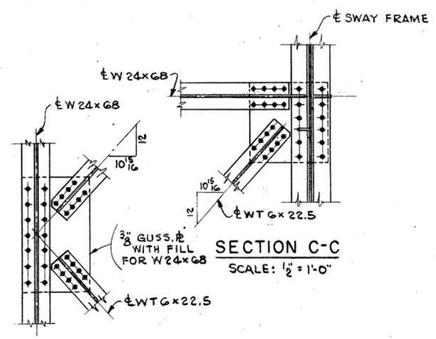

SECTION C-C

SCALE: 1/2" = 1'-0"

DETAIL "A"

SCALE: 1/2" = 1'-0"

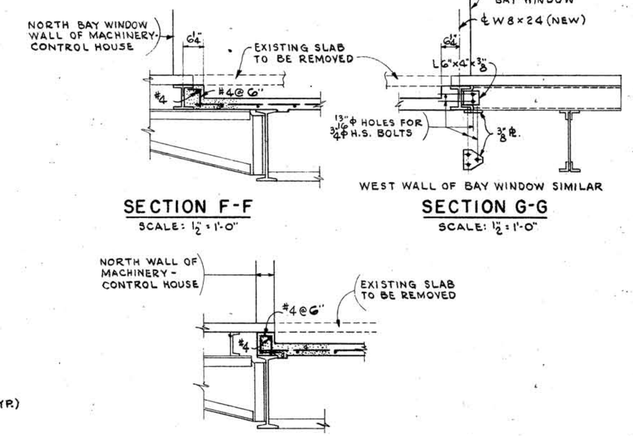

SECTION F-F

SCALE: 1/2" = 1'-0"

SECTION G-G

SCALE: 1/2" = 1'-0"

SECTION H-H

SCALE: 1/2" = 1'-0"

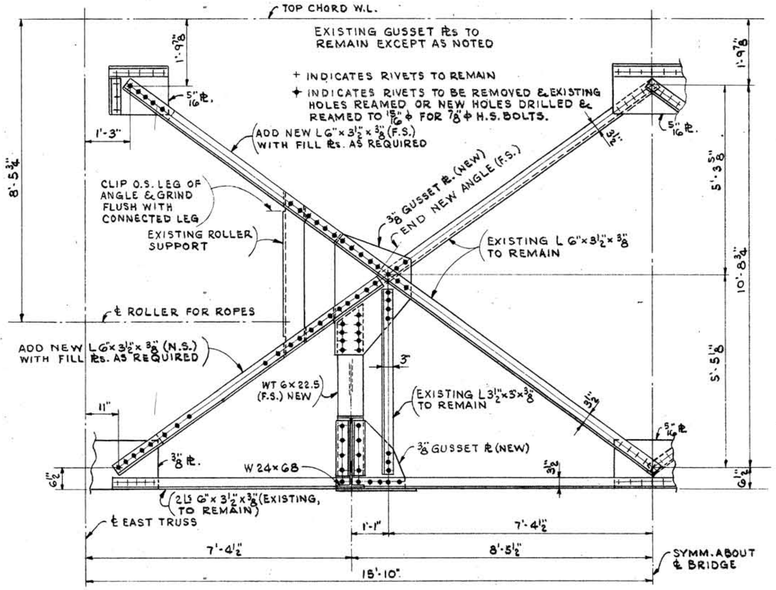

SECTION A-A

LOOKING SOUTH TOWARD SWAY FRAME AT U4L4

SCALE: 1/2" = 1'-0"

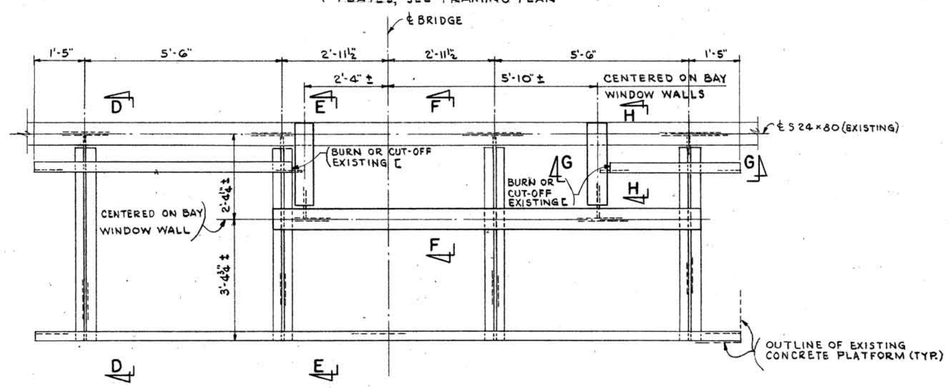

PLAN AT BAY WINDOW PLATFORM

SCALE: 1/2" = 1'-0"

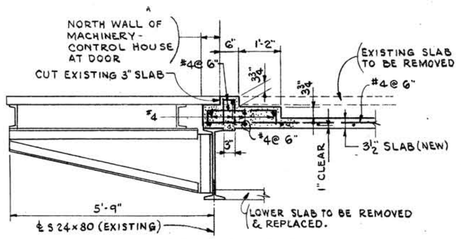

SECTION D-D

SCALE: 1/2" = 1'-0"

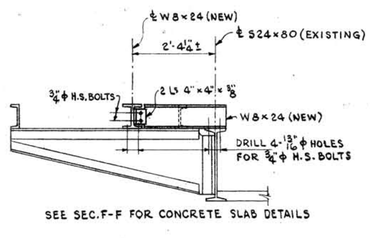

SEE SEC. F-F FOR CONCRETE SLAB DETAILS

SECTION E-E

SCALE: 1/2" = 1'-0"

NOTE:

NORTH WALL OF MACHINERY CONTROL HOUSE, INCLUDING BAY WINDOW, SHALL BE SHORED BY CONTRACTOR DURING CONSTRUCTION OF SLAB AS REQUIRED.

NEW HAMPSHIRE DEPARTMENT OF PUBLIC WORKS AND HIGHWAYS
AND
STATE OF MAINE DEPARTMENT OF TRANSPORTATION

BRIDGE NO 247/084 (MEMORIAL BRIDGE)
ROUTE U S I OVER THE PISCATAQUA RIVER

FRAMING PLAN
MACHINERY - CONTROL HOUSE

HARDESTY & HANOVER CONSULTING ENGINEERS NEW YORK, N.Y.	SCALE: AS NOTED DR. F.Mc. APPR. C.G. DATE: JUNE, 1975	NEW HAMPSHIRE PROJECT P-1961-A SHEET 3 OF 13

SHEET NO.	TOTAL SHEETS
4	14

1-18-1-2

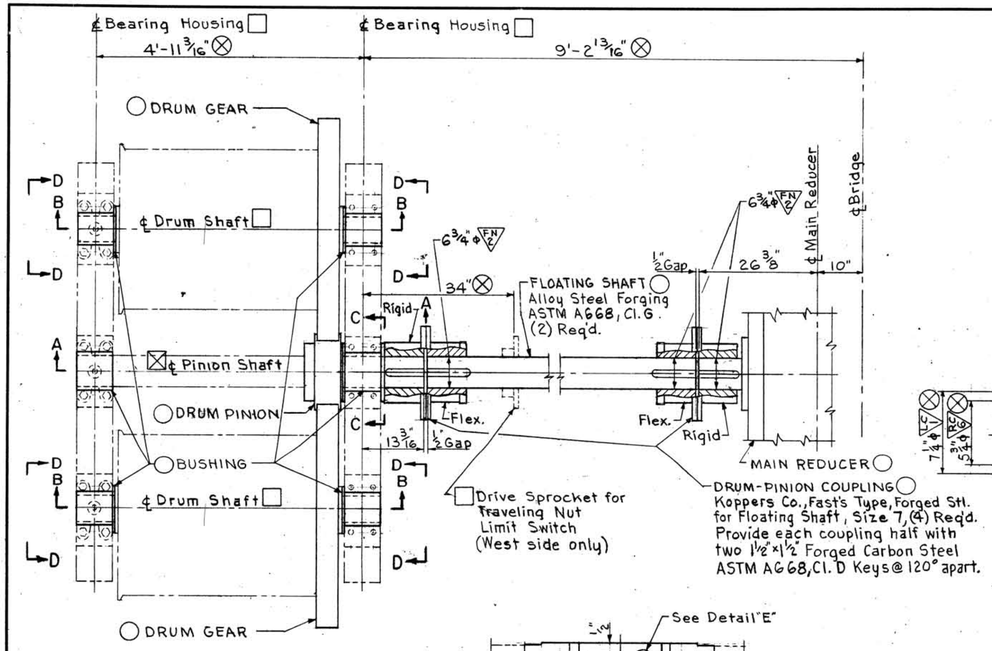

ENLARGED DETAIL
OF DRUM DRIVE
WEST DRUMS SHOWN
Scale: ¾" = 1'-0"

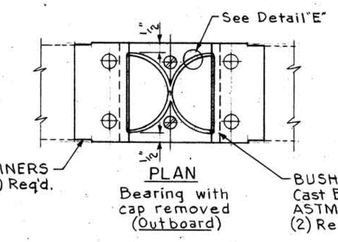

PLAN
Bearing with
cap removed
(Outboard)

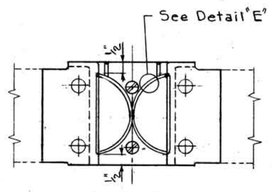

PLAN
Bearing with
cap removed

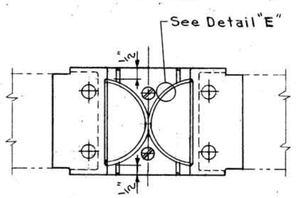

PLAN
Bearing with
cap removed
(Inboard)

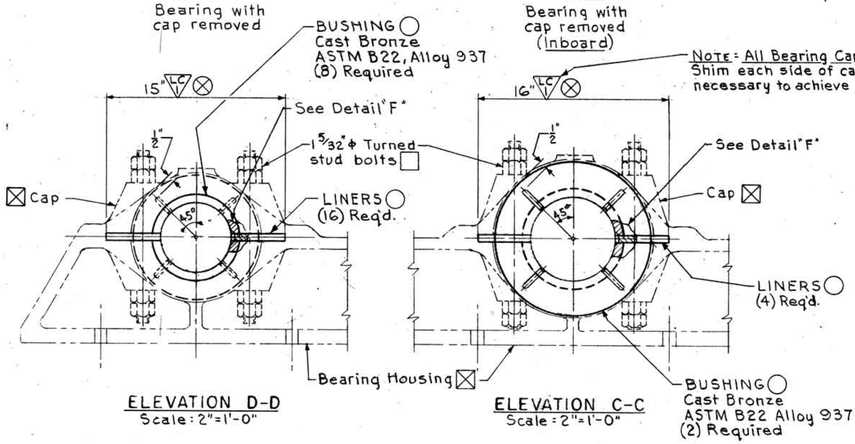

ELEVATION D-D
Scale: 2" = 1'-0"

ELEVATION C-C
Scale: 2" = 1'-0"

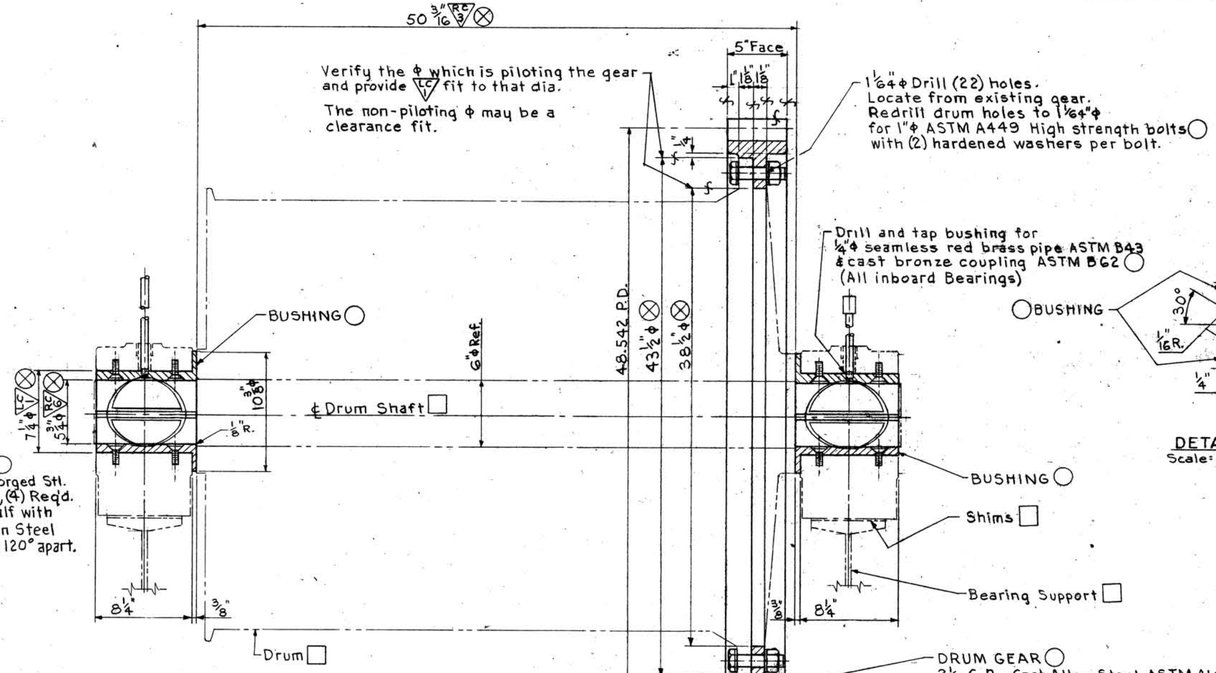

SECTION B-B
Scale: 2" = 1'-0"

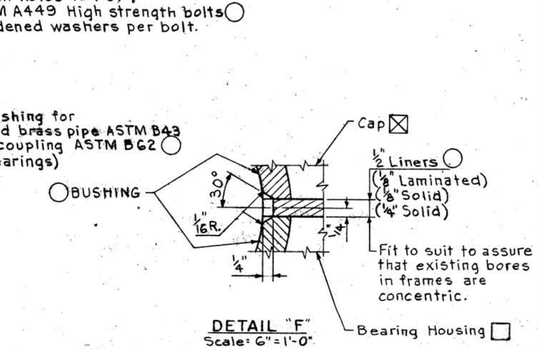

DETAIL "F"
Scale: 6" = 1'-0"

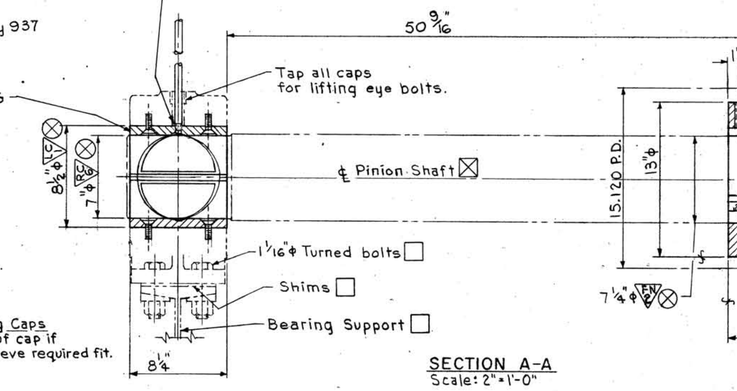

SECTION A-A
Scale: 2" = 1'-0"

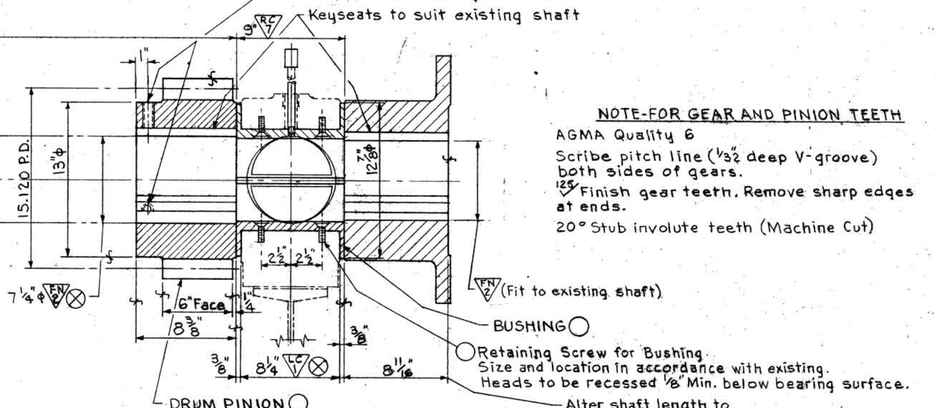

NOTE-FOR GEAR AND PINION TEETH

AGMA Quality 6

Scribe pitch line (1/32" deep V-groove) both sides of gears.

125 Finish gear teeth. Remove sharp edges at ends.

20° Stub involute teeth (Machine Cut)

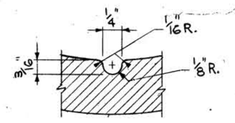

DETAIL "E"
Double Oval Grease Groove
Machine Cut
Scale: 12" = 1'-0"

REFERENCES — SEE SHEET

Machinery Improvements Ass'y. & General Machinery Notes ---------- 6

NEW HAMPSHIRE DEPARTMENT OF PUBLIC WORKS AND HIGHWAYS
AND
STATE OF MAINE DEPARTMENT OF TRANSPORTATION

BRIDGE NO. 247/084 (MEMORIAL BRIDGE)
ROUTE U.S.1 OVER THE PISCATAQUA RIVER

MACHINERY IMPROVEMENTS
DETAILS-1

HARDESTY & HANOVER CONSULTING ENGINEERS NEW YORK, N.Y.	SCALE: As Noted DR. P.J.C. APPR. DATE: June, 1975	NEW HAMPSHIRE PROJECT P-1961-A SHEET 7 OF 13

SHEET NO.	TOTAL SHEETS
8	14

1-18-1-2

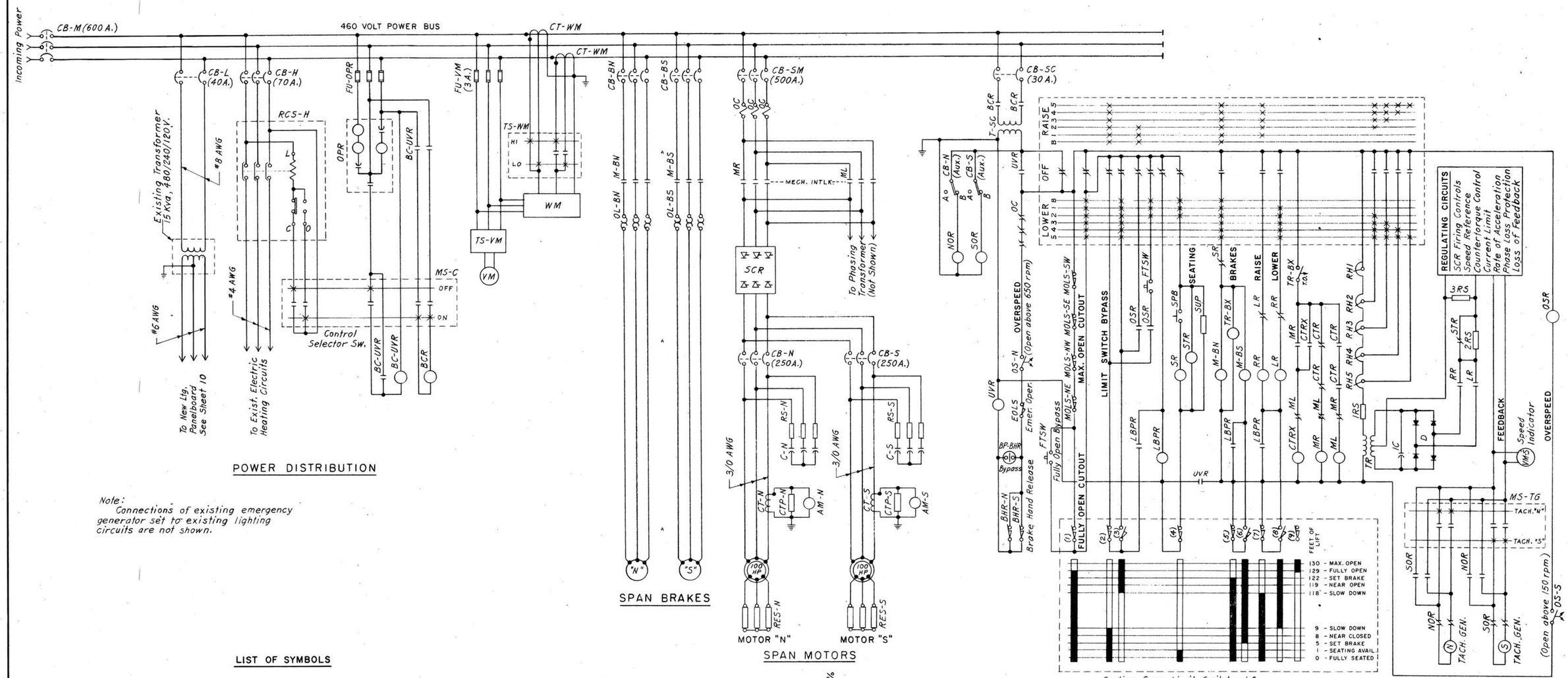

Exsting Span Limit Switch - LS

POWER DISTRIBUTION

Note:
Connections of existing emergency generator set to existing lighting circuits are not shown.

SPAN BRAKES

SPAN MOTORS

SPAN CONTROL

LIST OF SYMBOLS

- ○ – Coil of Magnetic Contactor or Relay
- – Thermal Overload Relay
- – Magnetic Overcurrent Relay
- – Contact of Magnetic Contactor or Relay, Normally Open
- – Contact of Magnetic Contactor or Relay, Normally Closed
- – Limit Switch Contact, Normally Open
- – Limit Switch Contact, Normally Closed
- T.C. – Timer Contact, Timed Closing (after Energizing)
- T.O. – Timer Contact, Timed Opening (after Energizing)
- T.C. – Timer Contact, Timed Closing (after Deenergizing)
- T.O. – Timer Contact, Timed Opening (after Deenergizing)
- – Air Circuit Breaker
- – N.E.C. Cartridge Fuse
- – Transformer Winding
- – Resistor, Fixed
- – Resistor, Adjustable
- – Rheostat
- – Rectifier
- – Capacitor
- – Pushbutton, Normally Open
- (R) – Indicating Light: R=Red, G=Green, A=Amber, W=White, B=Blue
- – Bypass Switch
- – Tumbler Switch, S.P.S.T.
- – Tumbler Switch, S.P.D.J.

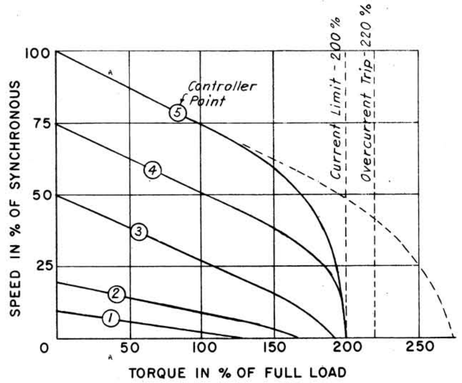

SPEED TORQUE CHARACTERISTICS

GENERAL NOTES FOR ELECTRICAL WORK:

1. *Except where otherwise noted, all circuits are shown deenergized.*
2. *Limit switch contacts are shown for lift span seated and emergency clutch disengaged.*
3. *Unless otherwise noted, the minimum size wire in conduits shall be No.12 AWG.*
4. *Separate wire designations shall be assigned for each branch circuit neutral.*

NEW HAMPSHIRE DEPARTMENT OF PUBLIC WORKS AND HIGHWAYS
AND
STATE OF MAINE DEPARTMENT OF TRANSPORTATION

BRIDGE NO 247/084 (MEMORIAL BRIDGE)
ROUTE U S I OVER THE PISCATAQUA RIVER

WIRING DIAGRAM - SPAN DRIVE

HARDESTY & HANOVER CONSULTING ENGINEERS NEW YORK, N.Y.	SCALE: NONE DR. K.A.S. APPR. H.B.H. DATE: JUNE, 1975	NEW HAMPSHIRE PROJECT P-1961-A SHEET 9 OF 13

SHEET NO.	TOTAL SHEETS
10	14

1-18-1-2

INDEX OF SHEETS

SHEET NO. 1 TITLE PAGE
2-38 BRIDGE PLANS

STANDARD SHEET NO.

CS-1	REVISED	MAY 10, 1980
CS-2	NEW SHEET	MAY 2, 1979
CS-3	REVISED	SEP. 22, 1980
CS-4	NEW SHEET	MAY 2, 1979
CS-5	REVISED	NOV. 15, 1979
CS-6	NEW SHEET	MAY 2, 1979
CS-11	REVISED	NOV. 15, 1979
CS-12	NEW SHEET	MAY 2, 1979
CS-13	NEW SHEET	MAY 2, 1979

STATE OF NEW HAMPSHIRE
DEPARTMENT OF PUBLIC WORKS AND HIGHWAYS

STATE OF MAINE
DEPARTMENT OF TRANSPORTATION, BUREAU OF HIGHWAYS

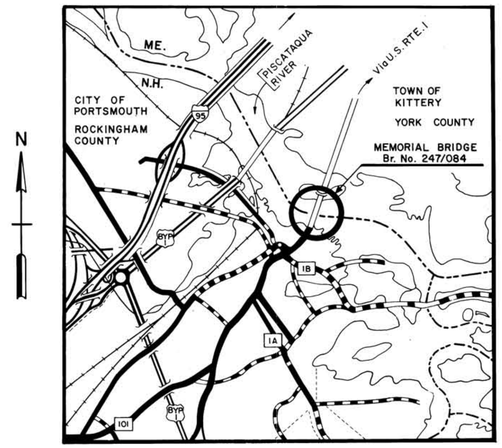

LOCATION MAP

1 0 1 MILE

SCALE 1/31680

PLANS OF PROPOSED

REHABILITATION
OF
TOWER AND LIFT SPAN STRUCTURAL STEEL
INCLUDING IMPROVEMENT WORK
BHF-001-1(58) P-3392

MEMORIAL BRIDGE

BRIDGE NUMBER 247/084
U.S. ROUTE 1 OVER PISCATAQUA RIVER

PORTSMOUTH, NEW HAMPSHIRE
COUNTY OF ROCKINGHAM

TO

KITTERY, MAINE
COUNTY OF YORK

STATE OF NEW HAMPSHIRE
HENRY W. FISCHER
No. 1476
REGISTERED
PROFESSIONAL ENGINEER

HARDESTY & HANOVER
CONSULTING ENGINEERS
NEW YORK, NEW YORK
Henry W. Fischer 5-4-81
DATE

STATE OF MAINE
DEPARTMENT OF TRANSPORTATION

RECOMMENDED FOR APPROVAL: DATE 6/16/81
Richard T. Coleman
BUREAU DIRECTOR AND CHIEF ENGINEER

APPROVED:
Joseph W. Cogswell
COMMISSIONER

NEW HAMPSHIRE DEPARTMENT OF
PUBLIC WORKS AND HIGHWAYS

RECOMMENDED FOR APPROVAL: DATE 6-9-81
Jerrold W. Webb
DEPUTY COMMISSIONER AND CHIEF ENGINEER

APPROVED:
John A. Clements
COMMISSIONER

1-18-1-3

SUMMARY OF BRIDGE QUANTITIES

ITEM NO.	DESCRIPTION	QUANTITY	UNIT
403.911	HOT BITUMINOUS BRIDGE PAVEMENT, 1" BASE COURSE WITH POLYESTER FIBERS	105	TON
403.912	HOT BITUMINOUS BRIDGE PAVEMENT, 1" WEARING COURSE	104	TON
511.001	CONCRETE BRIDGE DECK PAVEMENT REMOVAL	1	U
511.02	PREPARATION FOR PARTIAL DEPTH CONCRETE BRIDGE DECK REPAIRS	180	S Y
512.01	PREPARATION FOR CONCRETE REPAIRS	90	S Y
520.02	CONCRETE CLASS P FOR PATCHING	15	C Y
520.12	CONCRETE CLASS A, ABOVE FOOTINGS	20	C Y
530.3	WATERPROOFING CONCRETE SURFACES	670	S Y
536.11	EPOXY COATING FOR CONCRETE	2,800	S F
538	BARRIER MEMBRANE	2,000	S Y
544	REINFORCING STEEL	2,750	L B
550.40	STRUCTURAL STEEL (REHAB. TRUSS MEMBERS)	1	U
550.41	STRUCTURAL STEEL (REPLACE L8-L9)	1	U
550.42	STRUCTURAL STEEL (REHAB. FLOORBEAMS)	1	U
550.43	STRUCTURAL STEEL (REPLACE RIVETS)	1,600	E A
550.44	STRUCTURAL STEEL (REHAB. DETERIORATED STEEL)	1	U
550.45	STRUCTURAL STEEL (REPLACE COUNTERWEIGHT TRACK GUIDES)	1	U
550.46	STRUCTURAL STEEL (GUIDE CASTINGS)	1	U
550.47	STRUCTURAL STEEL (REPAIR DECK STEEL GRID)	250	INS
550.48	STRUCTURAL STEEL (STEEL GRID SKID STUDS)	41,000	E A
550.49	STRUCTURAL STEEL (EXPANSION SHOES)	1	U
550.50	STRUCTURAL STEEL (EXPANSION JOINTS)	1	U
550.51	STRUCTURAL STEEL (WARNING GATE PLATFORMS)	1	U
550.52	STRUCTURAL STEEL (LADDERS TO TOP OF TOWERS)	1	U
550.53	STRUCTURAL STEEL (MISC. STEEL REPAIRS)	1,500	LB
550.54	STRUCTURAL STEEL (HEAT STRAIGHTENING)	1	U
550.55	STRUCTURAL STEEL (REPAIR OF STRINGERS AND FLOOR JOISTS UNDER STEEL GRID FLOOR)	1	U
555.1	STEEL GRID FLOOR (OPEN)	2,300	SF
555.3	STEEL GRID FLOOR (FILLED)	480	SF
556	PAINTING EXISTING STRUCTURAL STEEL	1	U
563.5	BRIDGE RAILING E	1,735	LF
568.1	STRUCTURAL TIMBER (SIDEWALKS AND PLATFORMS)	66	MBM
568.2	STRUCTURAL TIMBER (FENDER SYSTEM)	15	MBM
606.416	MOVING PORTABLE CONCRETE MEDIAN BARRIER DOUBLE FACED	3,000	LF
618.109	UNIFORMED OFFICERS AND FLAGMEN		$
619.1	MAINTENANCE OF TRAFFIC INCLUDING DUST LAYING	1	U
619.2	CONSTRUCTION SIGNS AND WARNING DEVICES	1	U
692	MOBILIZATION	1	U
698.3	FIELD OFFICE (MODIFIED)	1	U
800	BALANCE OF COUNTERWEIGHTS	1	U
801	GATE TENDERS' BOOTHS, TOOL BOX AND UTILITY SHED	1	U
802	STONE MASONRY JOINTS	400	LF
803	PURGE AND LUBRICATE SHEAVE BEARINGS	1	U
804	CARPETING	40	SY
805	REMOVAL OF ABANDONED BRIDGE ACCESSORIES		$
806	CONTROL-MACHINERY HOUSE- UPGRADING	1	U
807	COUNTERWEIGHT ROPES	1	U
808	ELECTRICAL WORK	1	U
1002	REPAIRS OR REPLACEMENTS AS NEEDED		$
563.84	TEMPORARY BRIDGE RAILING	720	LF
616.101	TRAFFIC CONTROL SIGNALS	1	U
809	REPLACEMENT OF OPERATING ROPES	1	U
1001	ON-THE-JOB TRAINING OF UNSKILLED WORKERS		$

THE ITEM BRIDGE QUANTITIES ARE ESTIMATED AND THE ABOVE SUMMARY OF BRIDGE QUANTITIES IS INFORMATION FOR BIDDING PURPOSES ONLY.

GENERAL NOTES

1. STATE OF NEW HAMPSHIRE STANDARD SPECIFICATIONS FOR ROAD AND BRIDGE CONSTRUCTION, 1974, AS AMENDED.
2. THE AASHTO STANDARD SPECIFICATIONS FOR HIGHWAY BRIDGES, 1977 WITH INTERIMS.
3. THE AASHTO STANDARD SPECIFICATIONS FOR MOVABLE HIGHWAY BRIDGES, 1978
4. FOR WELDING, SEE N.H. STANDARD SPECIFICATIONS WHICH INCLUDE AASHTO AND AWS SPECIFICATIONS.
5. THE CONTRACTOR SHALL SO ARRANGE HIS SCHEDULE OF OPERATIONS SUCH THAT THE REMOVAL, REPAIR AND/OR REPLACEMENT WORK WILL BE COMPLETED IN AN EXPEDITIOUS MANNER WITH A MINIMUM OF INTERFERENCE TO BRIDGE TRAFFIC AND RIVER TRAFFIC AND AS APPROVED BY THE ENGINEER.
6. STRUCTURAL STEEL SHALL BE AASHTO M 183 (ASTM A36), EXCEPT AS OTHERWISE PERMITTED.
7. MEAN LOW WATER (M.L.W.) IS SET AT 0 FEET AS MEASURED AT THE NATIONAL OCEANIC AND ATMOSPHERIC ADMINISTRATION TIDAL BENCH MARK AT PORTSMOUTH NAVY SHIPYARD. MEAN SEA LEVEL (M.S.L.) = 3.83 FEET (NATIONAL GEODETIC VERTICAL DATUM OF 1929). MEAN HIGH WATER (M.H.W.) = 8.10 FEET.

CONSTRUCTION SIGNS AND WARNING DEVICES.

SIGN NO.	DESCRIPTION	SIZE	S.F.	NO. REQ'D	TOT. AREA	POSTS	EASELS
G20-2	END CONSTRUCTION	3x6	18	2	36	4	
R4-7L	KEEP LEFT	2x2½	5	4	20	4	
R4-7R	KEEP RIGHT	2x2½	5	4	20	4	
W1-8	CHEVRON	2x2½	5	20	100	20	
W20-1a	ROAD (BRIDGE) CONSTRUCTION (AHEAD)	4x4	16	2	32	4	
W20-1b	ROAD (BRIDGE) CONSTRUCTION (500FT)	4x4	16	2	32		2
W20-4a	ONE LANE BRIDGE (AHEAD)	4x4	16	2	32	4	
W20-5a	RIGHT (LEFT) LANE CLOSED (AHEAD)	4x4	16	4	64		4
W20-7a	FLAGMAN (AHEAD)	4x4	16	2	32		2
W20-9	BE PREPARED TO STOP	4x4	16	2	32		2
	BARRICADES TYPE II			30			
	WARNING LIGHTS TYPE A OR C			30			
	TRAFFIC CONES 28" ORANGE			250			
	SIGN PADDLES			2			

Des. CJR
Drw. T.B.
Chk. E.S.T.

Proj. Engr. Eugene S. Tulich

NEW HAMPSHIRE DEPARTMENT OF PUBLIC WORKS AND HIGHWAYS
AND
STATE OF MAINE DEPARTMENT OF TRANSPORTATION

BRIDGE NO. 247/084 (MEMORIAL BRIDGE)
ROUTE US 1 OVER THE PISCATAQUA RIVER

QUANTITIES AND GENERAL NOTES

HARDESTY & HANOVER CONSULTING ENGINEERS NEW YORK, N.Y.	SCALE: NONE DR. T.B. APPR. E.S.T. DATE: MAY 4, 1981	NEW HAMPSHIRE PROJECT P-3392 SHEET 2 OF 38

1-18-1-3

FILE NUMBER	FEDERAL PROJECT	SHEET NO.	TOTAL SHEETS
~~4-14-4-10~~	BHF-001-1(58)	2	38

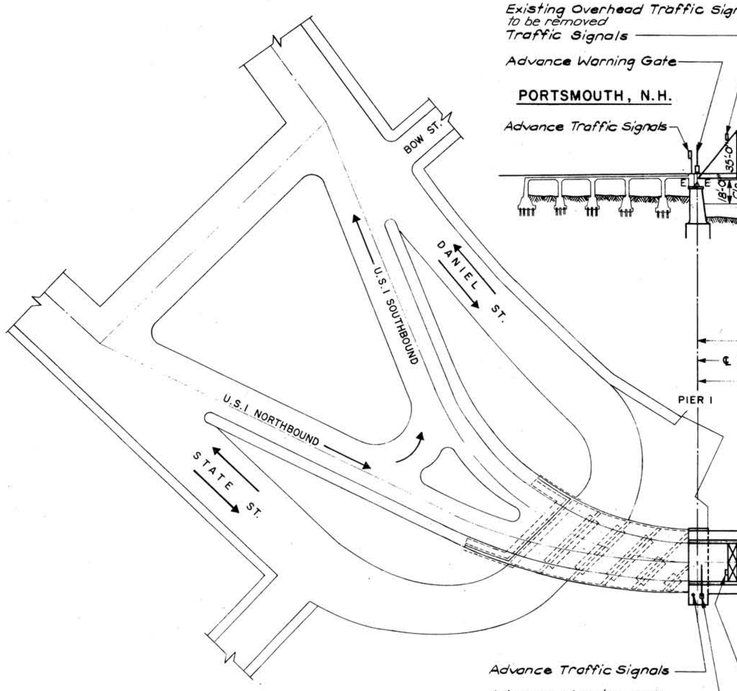

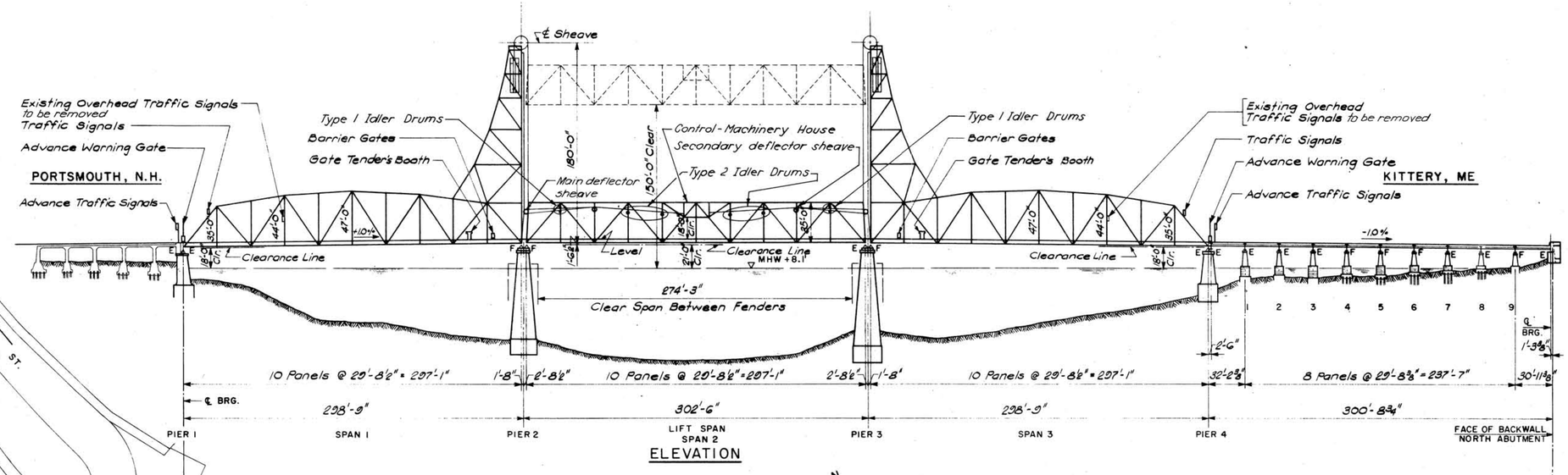

ELEVATION

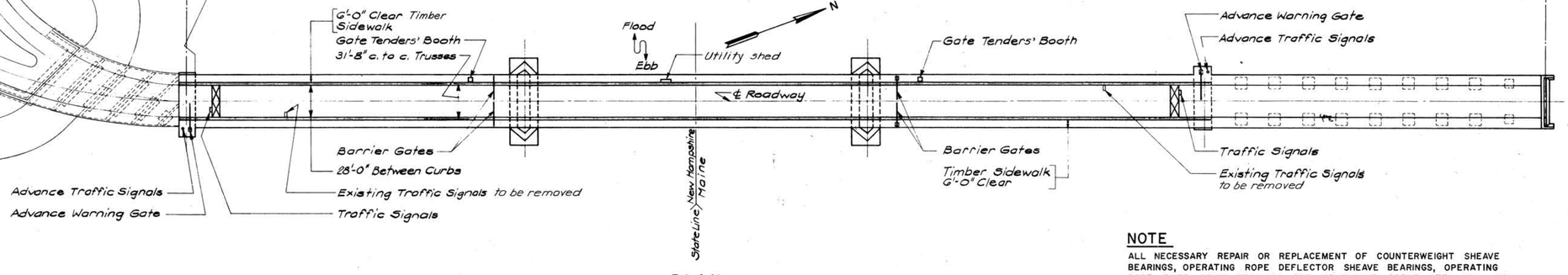

PLAN

0 50 75 100 150 200
SCALE IN FEET

NOTE

ALL NECESSARY REPAIR OR REPLACEMENT OF COUNTERWEIGHT SHEAVE BEARINGS, OPERATING ROPE DEFLECTOR SHEAVE BEARINGS, OPERATING ROPE IDLER DRUM BEARINGS AND TELEPHONE CABLE REEL WILL BE PAID FOR UNDER ITEM 1002, REPAIRS OR REPLACEMENTS, AS NEEDED.
REFACING OF EIGHT, TYPE 2, OPERATING ROPE IDLER DRUM CONTACT SURFACES, REPLACEMENT OF EIGHT, TYPE 1, OPERATING ROPE IDLER DRUMS, REFACING OF OPERATING ROPE DEFLECTOR SHEAVE GROOVES AND REFACING OF THE WINDING DRUM GROOVES WILL BE PAID FOR UNDER ITEM 1002, REPAIRS OR REPLACEMENTS AS NEEDED.
CLEAN AND GRIND CRACK IN NORTHEAST SHEAVE WEB AND FILL WITH AUTO BODY COMPOUND, TO BE PAID FOR UNDER ITEM 1002, REPAIRS OR REPLACEMENTS AS NEEDED.

LIST OF DRAWINGS

1 TITLE SHEET
2 QUANTITIES AND GENERAL NOTES
3 GENERAL PLAN AND ELEVATION
4 ADVANCE WARNING GATE AND TRAFFIC SIGNAL PLATFORMS
5 BARRIER CURB RAILING - ELEVATION
6 BARRIER CURB RAILING - ELEVATIONS AND SECTIONS
7 BARRIER CURB RAILING DETAILS AND TIMBER SIDEWALK PLAN
8 BARRIER GATE AND RAILING EXPANSION JOINT
9 GATE TENDERS' BOOTHS AND MISCELLANEOUS DETAILS
10 MAINTENANCE OF TRAFFIC FOR TRUSS REPAIRS
11 TRUSS WEB REPAIRS - 1
12 TRUSS WEB REPAIRS - 2
13 TRUSS WEB REPAIRS - 3
14 TRUSS WEB REPAIRS - 4
15 REPLACE CHORD MEMBER L8 - L9 - SPAN 3 - EAST TRUSS
16 LOWER CHORD REPAIRS - SPANS 1 AND 3
17 LOWER CHORD REPAIRS - SPAN 2
18 TYPICAL BOTTOM LATERAL GUSSET DETAILS
19 UPPER CHORD REPAIRS - SPANS 1, 2 AND 3
20 LIFT SPAN FLOORBEAM REPAIRS
21 DETERIORATED STEEL REPAIRS
22 ROADWAY REPAIRS
23 ROADWAY EXPANSION JOINTS
24 COUNTERWEIGHT GUIDE REPLACEMENTS AND TOWER REPAIRS
25 COUNTERWEIGHT AND LIFT SPAN GUIDE CASTINGS
26 TIMBER PLATFORM - TOP OF TOWER
27 TOWER SPAN EXPANSION SHOES AND OPERATING ROPES
28 REPAIR OF CONCRETE PEDESTALS
29 CONCRETE REPAIR OF PIER 1
30 FENDER SYSTEM REPAIRS
31 FENDER SYSTEM DETAILS
32 MISCELLANEOUS DETAILS
33 LADDERS
34 CONTROL AND MACHINERY HOUSE - 1
35 CONTROL AND MACHINERY HOUSE - 2
36 ELECTRICAL WORK - 1
37 ELECTRICAL WORK - 2
38 ELECTRICAL WORK - 3

Des. EST
Drw. ASD
Chk. EST

Proj.Engr. Eugene J. Tulish

NEW HAMPSHIRE DEPARTMENT OF PUBLIC WORKS AND HIGHWAYS
AND
STATE OF MAINE DEPARTMENT OF TRANSPORTATION

BRIDGE NO. 247/084 (MEMORIAL BRIDGE)
ROUTE US 1 OVER THE PISCATAQUA RIVER

GENERAL PLAN AND ELEVATION

HARDESTY & HANOVER
CONSULTING ENGINEERS
NEW YORK, N.Y.

SCALE: AS NOTED
DR. ASD APPR. EST
DATE: MAY 4, 1981

NEW HAMPSHIRE PROJECT P-3392
SHEET 3 OF 38

1-18-1-3
FILE NUMBER
~~4-14-4-16~~

FEDERAL PROJECT	SHEET NO.	TOTAL SHEETS
BHF-001-1(58)	3	38

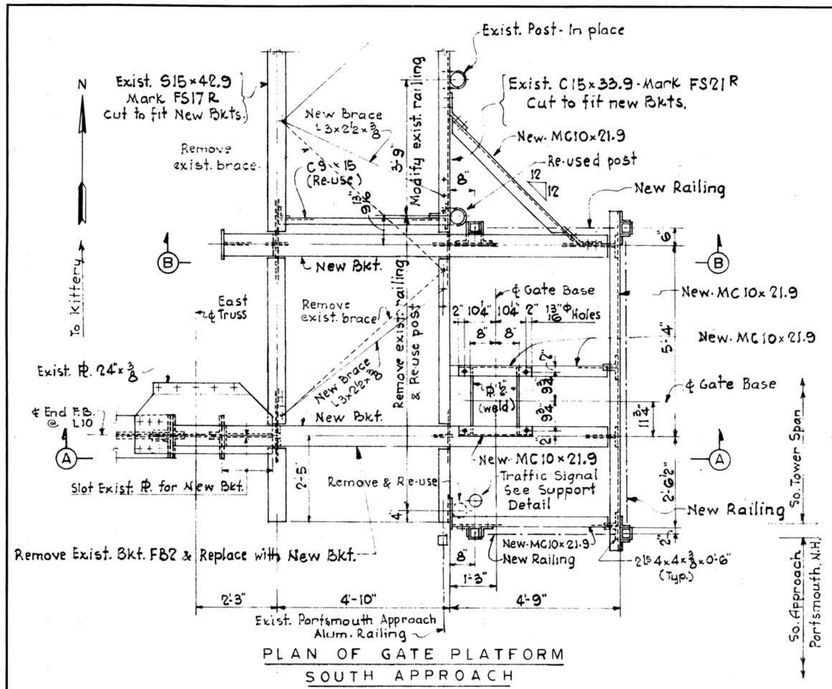

PLAN OF GATE PLATFORM
SOUTH APPROACH
Scale: ½"=1'-0"

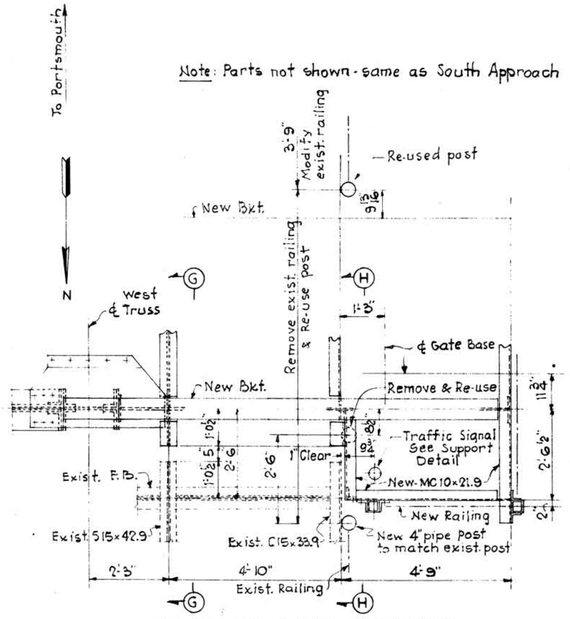

PLAN OF GATE PLATFORM
NORTH APPROACH
Scale: ½"=1'-0"

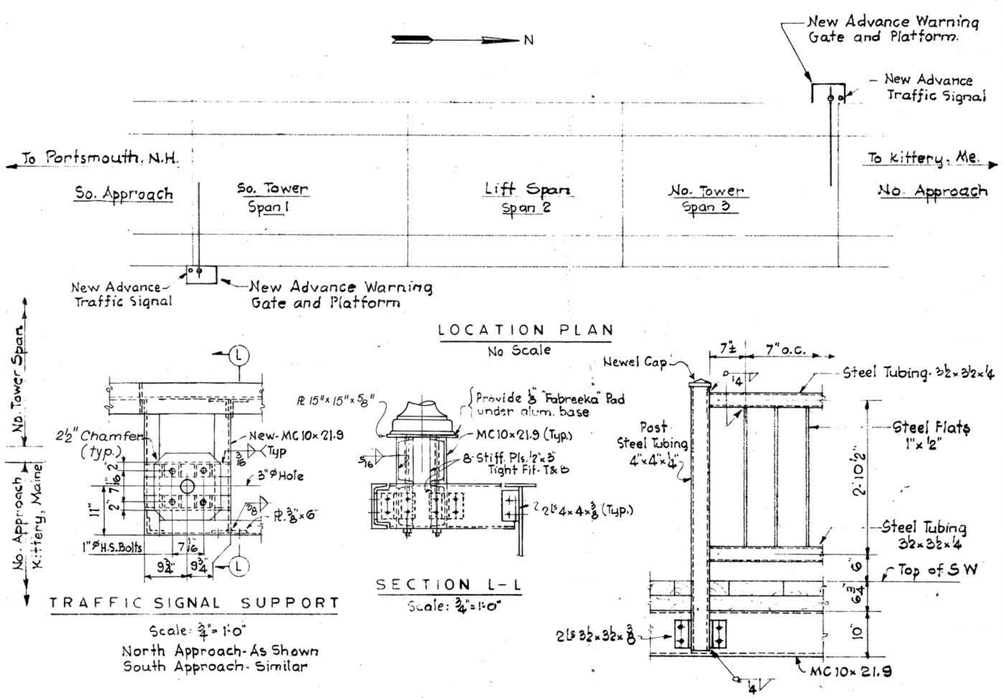

LOCATION PLAN
No Scale

TRAFFIC SIGNAL SUPPORT
Scale: ¾"=1'-0"
North Approach - As Shown
South Approach - Similar

SECTION L-L
Scale: ¾"=1'-0"

DETAIL OF NEW RAILING
Scale: ¾"=1'-0"

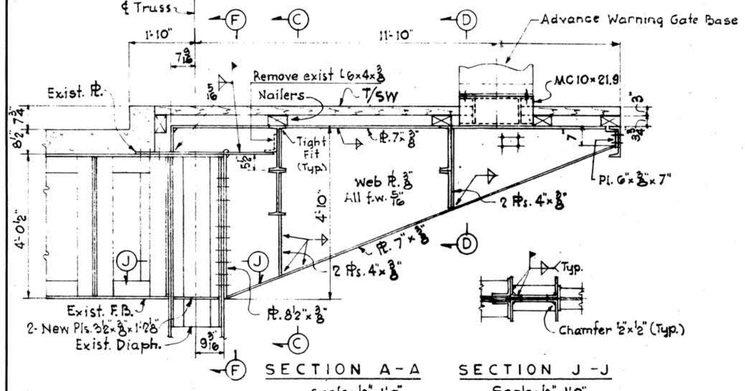

SECTION A-A
Scale: ½"=1'-0"

SECTION J-J
Scale: ½"=1'-0"

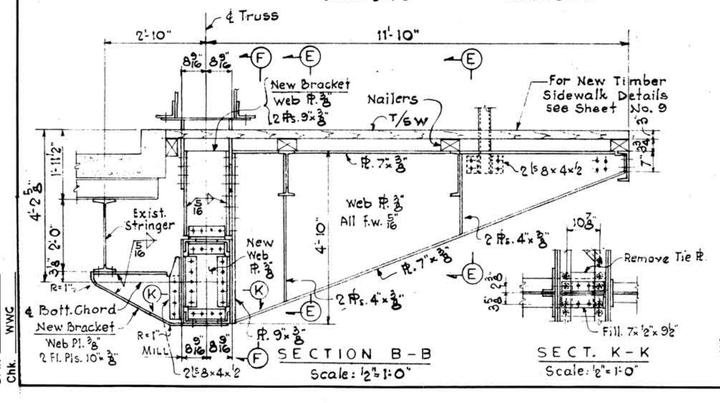

SECTION B-B
Scale: ½"=1'-0"

SECT. K-K
Scale: ½"=1'-0"

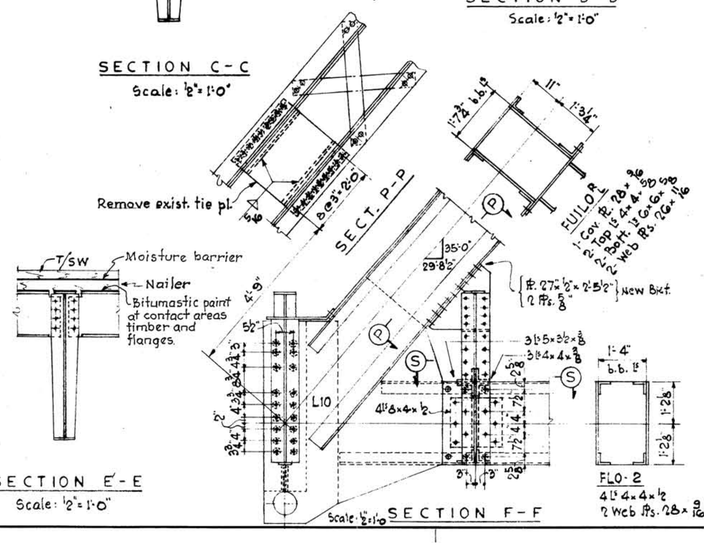

SECTION E-E
Scale: ½"=1'-0"

SECTION F-F
Scale: ½"=1'-0"

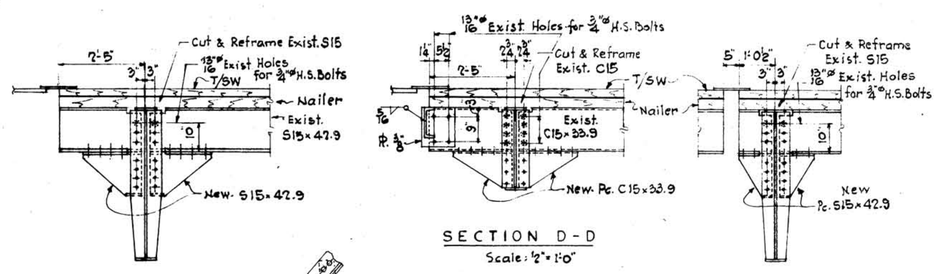

SECTION C-C
Scale: ½"=1'-0"

SECTION D-D
Scale: ½"=1'-0"

SECTION G-G
Scale: ½"=1'-0"

SECTION H-H
Scale: ½"=1'-0"

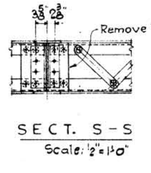

SECT. S-S
Scale: ½"=1'-0"

NOTES

Φ = K.O. ⅞"Φ Rivet & Replace with ⅞"Φ A325 H.S. Bolt unless noted.

Open Holes: 15/16"Φ unless noted.

Bolts: ⅞"Φ A325 H.S. - unless noted.

All material AASHTO M183 (ASTM A36)

Details of existing members taken from shop details & must be verified in field before fabrication.

All fillet welds 5/16 unless noted.

All steel work on this Sheet to be paid for under Item 550.51, Structural Steel (Warning Gate Platforms.)

Shop Ref. Dwgs.
FB2 - Sheet 2
FUILO - Sheet 66
FLO-2 - Sheet 10
FD2, FS17R, FS21R - Sheet 9

Proj. Engr. E.S. Turbiak
Order No. F600
1-18-83

Des. EPS
Drw. ERS
Chk. WWG

NEW HAMPSHIRE DEPARTMENT OF PUBLIC WORKS AND HIGHWAYS
AND
STATE OF MAINE DEPARTMENT OF TRANSPORTATION

BRIDGE NO. 247/084 (MEMORIAL BRIDGE)
ROUTE US 1 OVER THE PISCATAQUA RIVER

NEW ADVANCE WARNING GATE AND TRAFFIC SIGNAL PLATFORMS

HARDESTY & HANOVER CONSULTING ENGINEERS NEW YORK, N.Y.	SCALE: AS NOTED DR. ERS APPR. EST DATE: MAY 4, 1981	NEW HAMPSHIRE PROJECT P-3392 SHEET 4 OF 38

FILE NUMBER	FEDERAL PROJECT	SHEET NO.	TOTAL SHEETS
~~4-14-4-10~~	BHF-001-1(58)	4	38

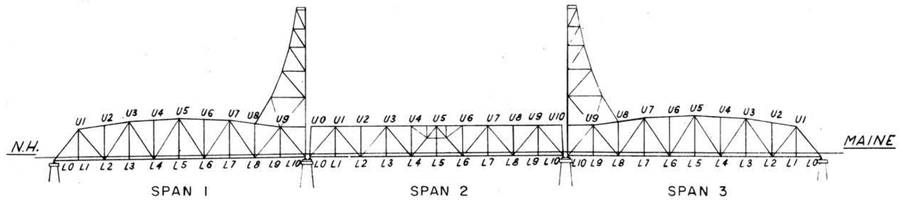

SOUTH TOWER SPAN — LIFT SPAN — NORTH TOWER SPAN

No scale.

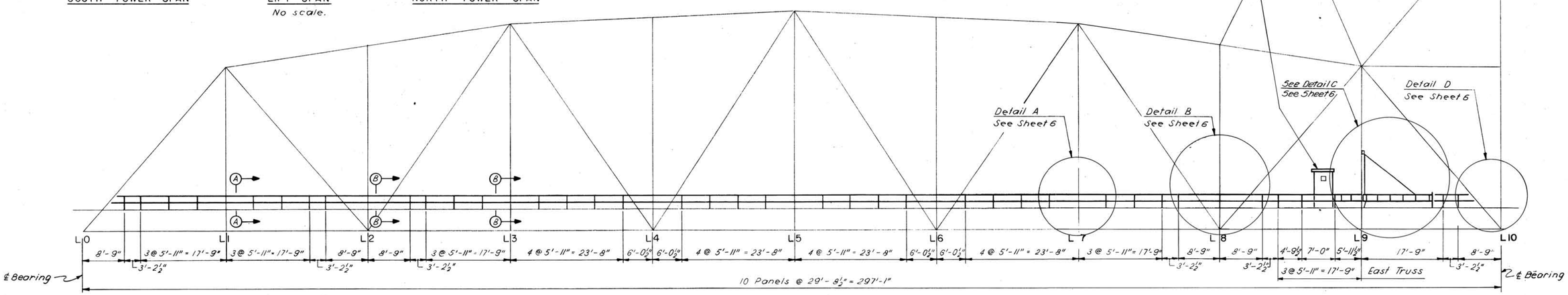

TOWER SPANS

East elevation of West truss of Span 1 shown. Span 3 Opposite Hand
Scale: 1" = 10'

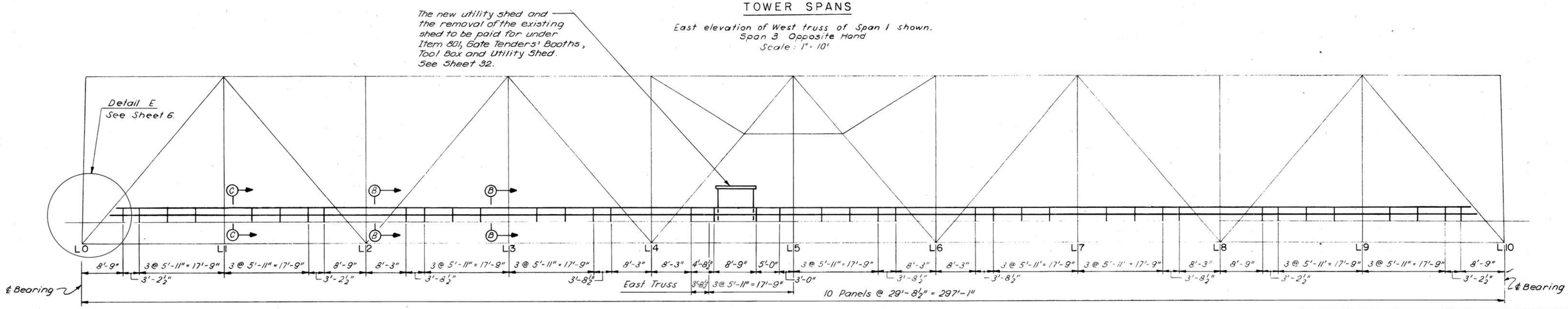

LIFT SPAN

East elevation of West truss shown
Scale: 1" = 10'

NOTES:

For Details A, B, C, D and E, see Sheet 6.
For Sections A-A and B-B see Sheet 6.
For Section C-C see Sheet 7.
Installation of barrier curb railing to be paid for under Item 563.5 Bridge Railing E.

Des. CJR
Drw. V.V.
Chk. E.J.T.

Proj. Engr. Eugene J. Turlish

1-18-1-3

NEW HAMPSHIRE DEPARTMENT OF PUBLIC WORKS AND HIGHWAYS
AND
STATE OF MAINE DEPARTMENT OF TRANSPORTATION

BRIDGE NO. 247/084 (MEMORIAL BRIDGE)
ROUTE US 1 OVER THE PISCATAQUA RIVER

BARRIER CURB RAILING ELEVATIONS

HARDESTY & HANOVER CONSULTING ENGINEERS NEW YORK, N.Y.	SCALE: AS NOTED DR. V.V. APPR. C.J.R. DATE: MAY 4, 1981	NEW HAMPSHIRE PROJECT P-3392 SHEET 5 OF 38

FILE NUMBER	FEDERAL PROJECT	SHEET NO.	TOTAL SHEETS
~~4-14-4-16~~	BHF - 001 - 1(58)	5	38

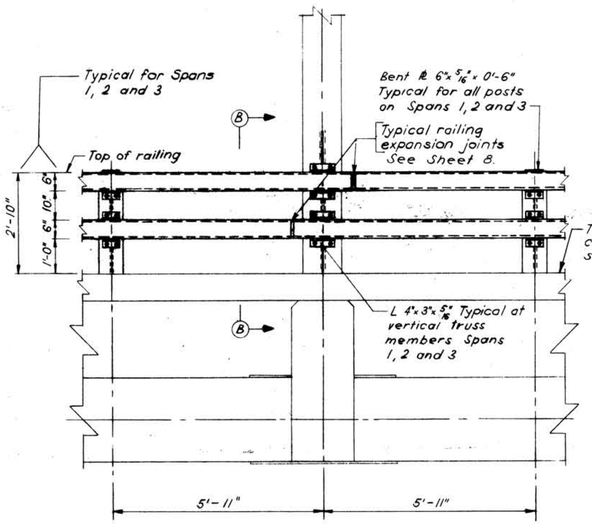

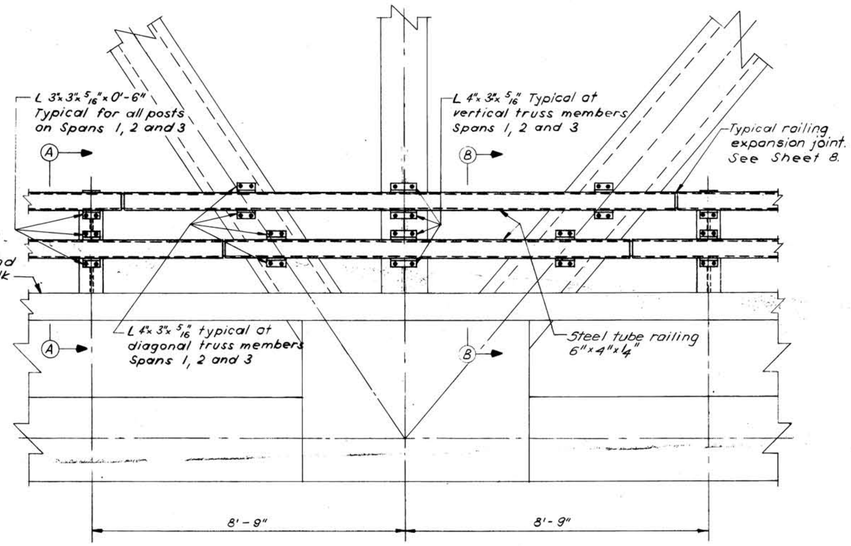

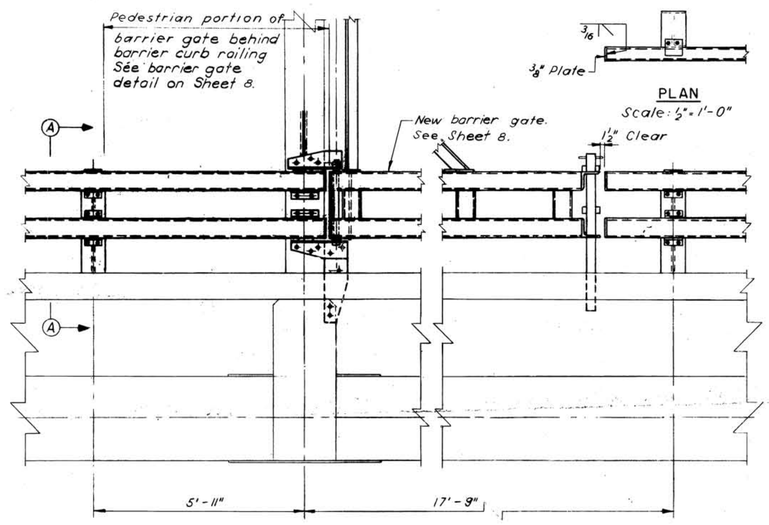

DETAIL A
TYPICAL
Scale: 1/2"=1'-0"

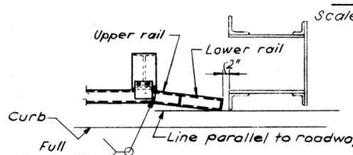

PLAN
Scale: 1/2"=1'-0"

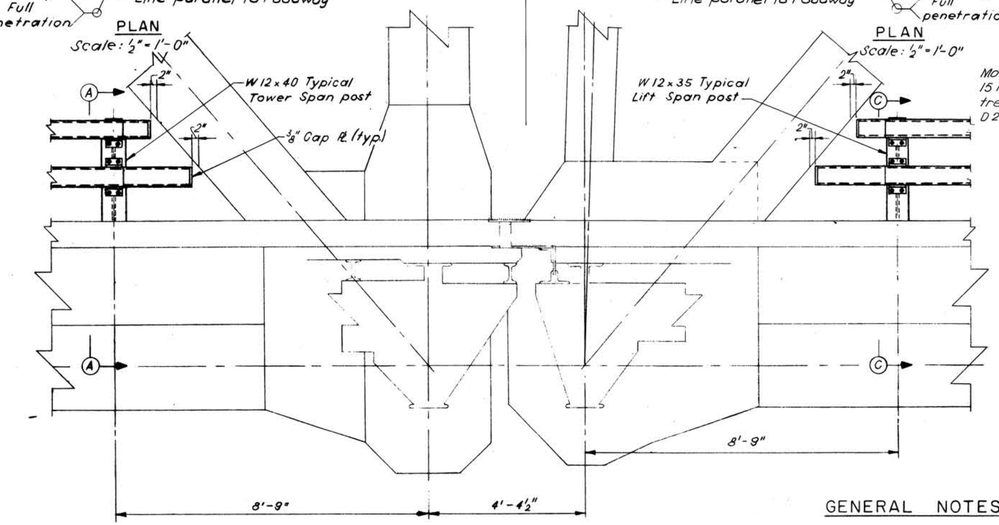

DETAIL B
TYPICAL
Scale: 1/2"=1'-0"

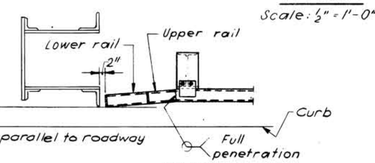

DETAIL C AT BARRIER GATE
Scale: 1/2"=1'-0"

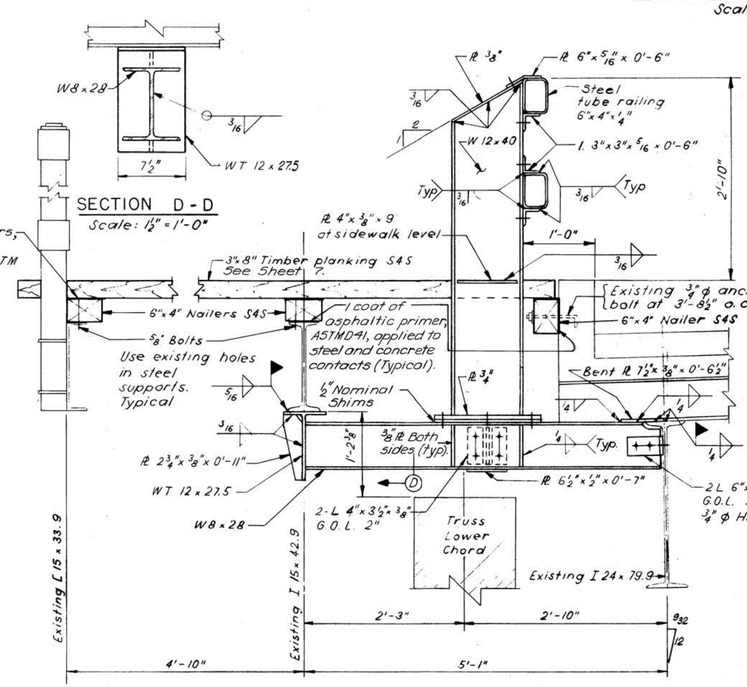

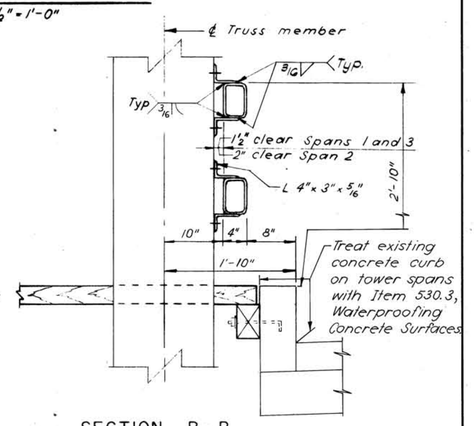

SECTION B-B
TYPICAL CONNECTION TO TRUSS MEMBERS
Spans 1, 2 and 3
Scale: 1"=1'-0"

NOTE:
For locations of Details A, B, C, D and E, see Sheet 5.
For Section C-C see Sheet 7.

SECTION A-A
Railing post Tower Spans 1 and 3
Scale: 1"=1'-0"

DETAIL D
Scale: 1/2"=1'-0"

DETAIL E
Scale: 1/2"=1'-0"

NOTES:
All work necessary for the installation of the barrier curb railings and supports to be paid for under Item 563.5, Bridge Railing E.
See notes on Sheet 7 regarding timber sidewalk.

GENERAL NOTES FOR BARRIER CURB RAILING

1. Bolts for barrier curb railing and supports shall be 3/4"ø H.S., except as noted.
2. Barrier curb railing shall be ASTM A500, Grade B and the supports shall be AASHTO M183 (ASTM A36).

Des. CJR
Drw. W
Chk. EJT

Proj. Engr. Eugene J. Tulish

1-18-1-3

NEW HAMPSHIRE DEPARTMENT OF PUBLIC WORKS AND HIGHWAYS
AND
STATE OF MAINE DEPARTMENT OF TRANSPORTATION

BRIDGE NO. 247/084 (MEMORIAL BRIDGE)
ROUTE US 1 OVER THE PISCATAQUA RIVER

BARRIER CURB RAILING ELEVATIONS AND SECTIONS

HARDESTY & HANOVER CONSULTING ENGINEERS NEW YORK, N.Y.	SCALE: AS NOTED DR. J.V. APPR. C.J.R. DATE: MAY 4, 1981	NEW HAMPSHIRE PROJECT P-3392 SHEET 6 OF 38

FILE NUMBER	FEDERAL PROJECT	SHEET NO.	TOTAL SHEETS
4-14-4-10	BHF-001-1(58)	6	38

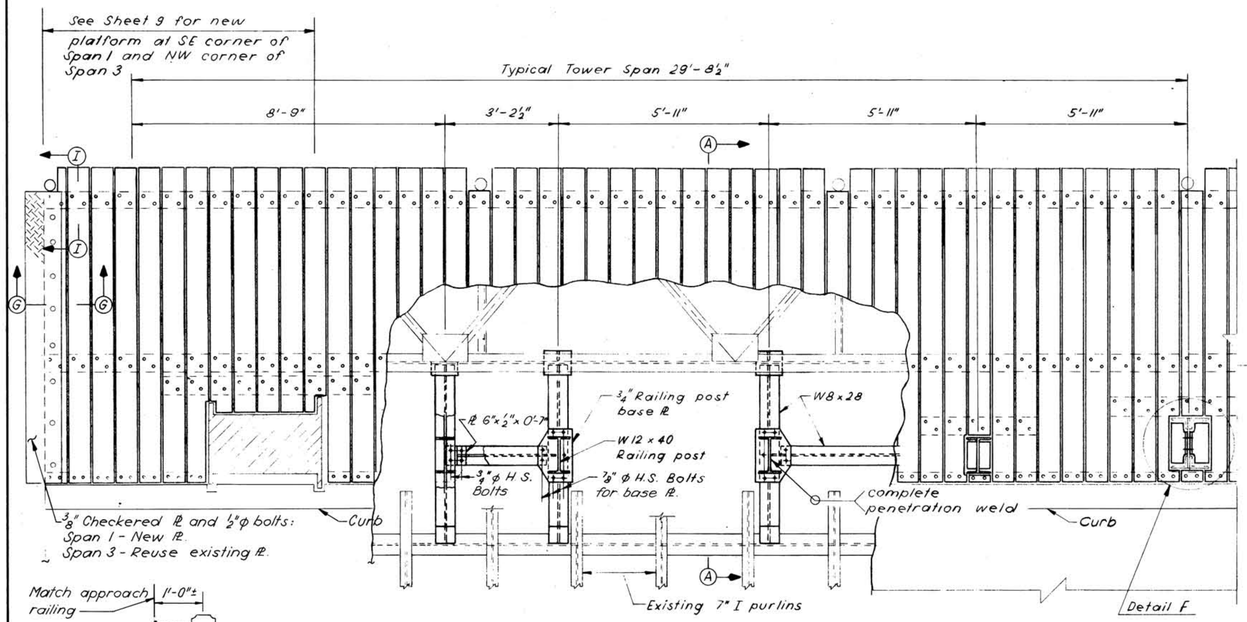

TOWER SPAN SIDEWALK AND RAILING POST SUPPORTS

Scale: ½" = 1'-0"

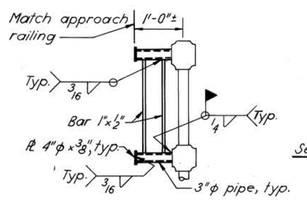

SECTION I-I

Scale: ½" = 1'-0"

NOTE for Section I-I: West side of Span 1 only. Remove existing welded rebars. Weld new closure piece as shown and as directed by the Engineer. To be paid for under Item 550.44, Structural Steel (Rehab. Deteriorated Steel).

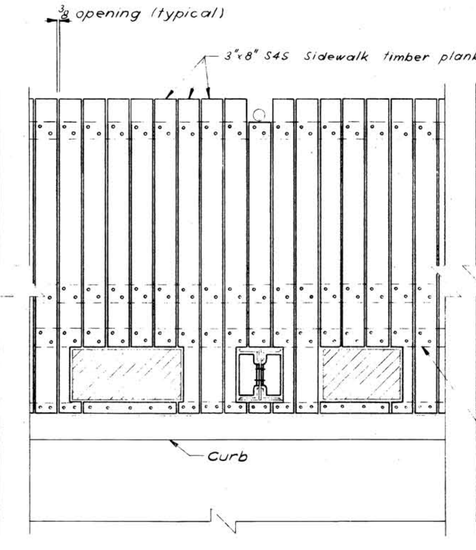

SIDEWALK PLAN AT TRUSS WEB MEMBERS

Scale: ½" = 1'-0"

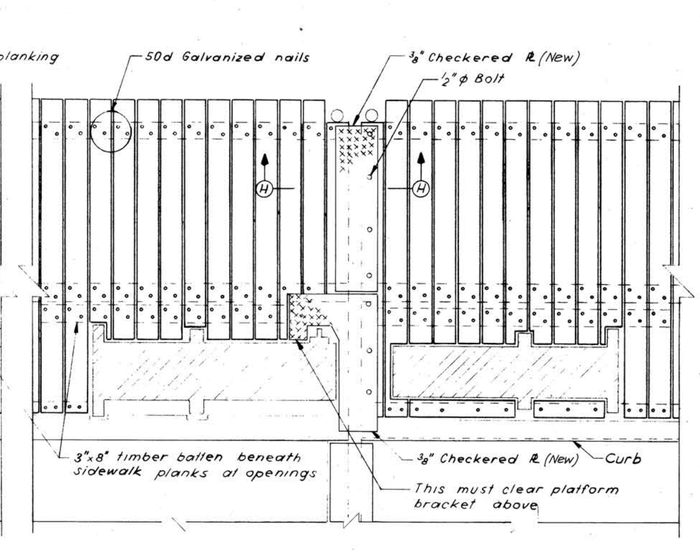

SIDEWALK PLAN AT LIFT SPAN AND TOWER SPAN

Scale: ½" = 1'-0"

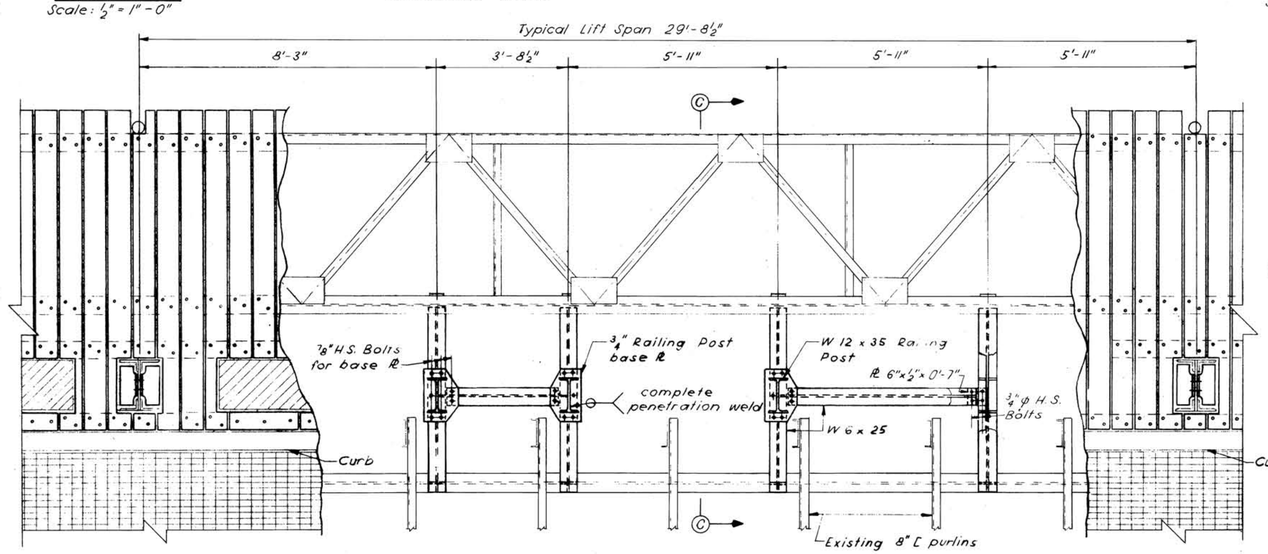

LIFT SPAN SIDEWALK AND RAILING POST SUPPORTS

Scale: ½" = 1'-0"

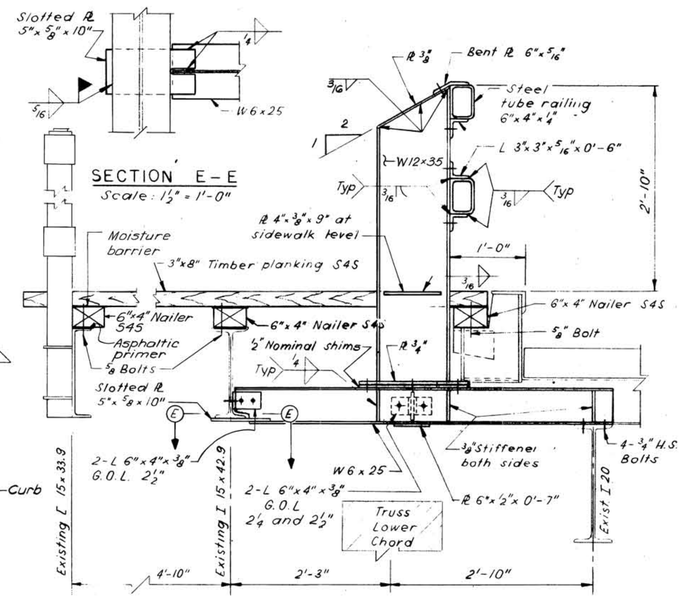

SECTION C-C

Typical railing post, Lift Span 2

Scale: 1" = 1'-0"

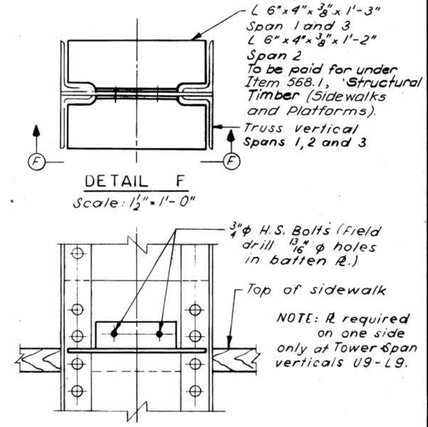

DETAIL F

Scale: 1½" = 1'-0"

SECTION F-F

Scale: 1½" = 1'-0"

NOTES:

See General Notes for Barrier Curb Railing on Sheet 6.

All work necessary for the installation of the barrier curb railings to be paid for under Item 563.5, Bridge Railing E.

All work necessary for the installation of the timber sidewalk to be paid for under Item 568.1, Structural Timber (Sidewalks and Platforms). For Sections G-G and H-H, see Sheet 9.

1-18-1-3

Des. C.J.R.
Drw. V.V.
Chk. E.J.F.

Proj. Engr. Eugene J. Furbish

NEW HAMPSHIRE DEPARTMENT OF PUBLIC WORKS AND HIGHWAYS AND STATE OF MAINE DEPARTMENT OF TRANSPORTATION

BRIDGE NO. 247/084 (MEMORIAL BRIDGE)
ROUTE US 1 OVER THE PISCATAQUA RIVER

BARRIER CURB RAILING DETAILS AND TIMBER SIDEWALK PLAN

HARDESTY & HANOVER CONSULTING ENGINEERS NEW YORK, N.Y.	SCALE: AS NOTED DR. V.V. APPR. C.J.R. DATE: MAY 4, 1981	NEW HAMPSHIRE PROJECT P-3392 SHEET 7 OF 38

FILE NUMBER	FEDERAL PROJECT	SHEET NO.	TOTAL SHEETS
~~4-14-4-16~~	BHF-001-1(58)	7	38

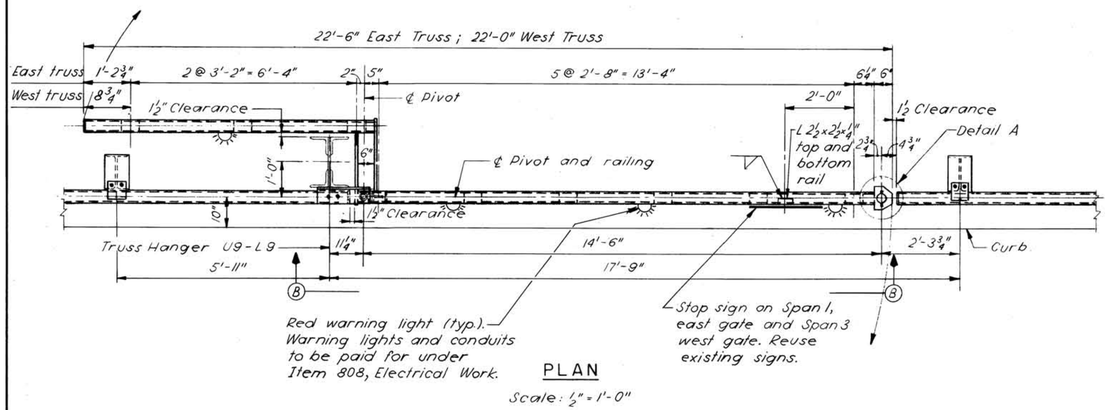

PLAN

Scale: ½" = 1'-0"

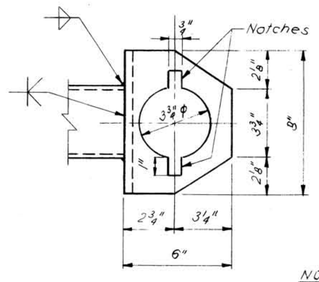

DETAIL A

Scale: 3" = 1'-0"

NOTE:
Bottom L similar except as noted

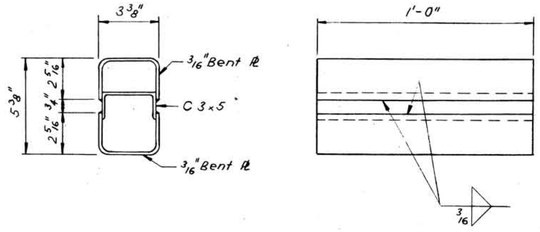

EXPANSION JOINT MATING ELEMENT

Scale: 3" = 1'-0"

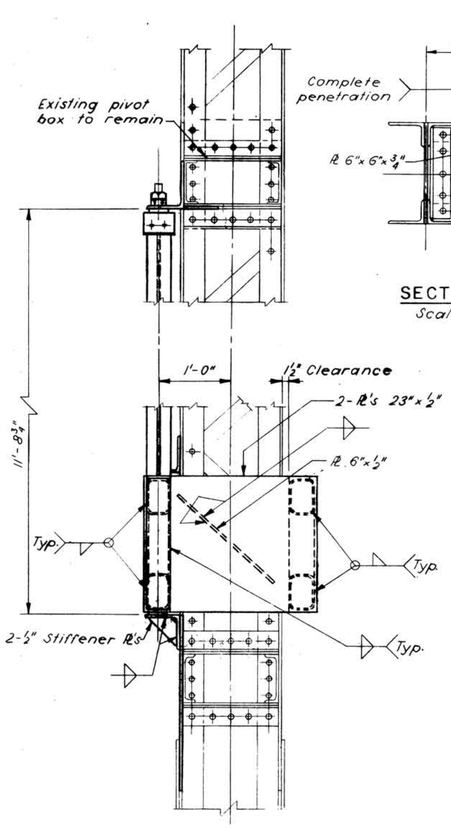

VIEW A - A

Scale: 1" = 1'-0"

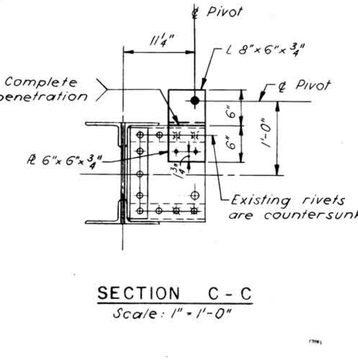

SECTION C - C

Scale: 1" = 1'-0"

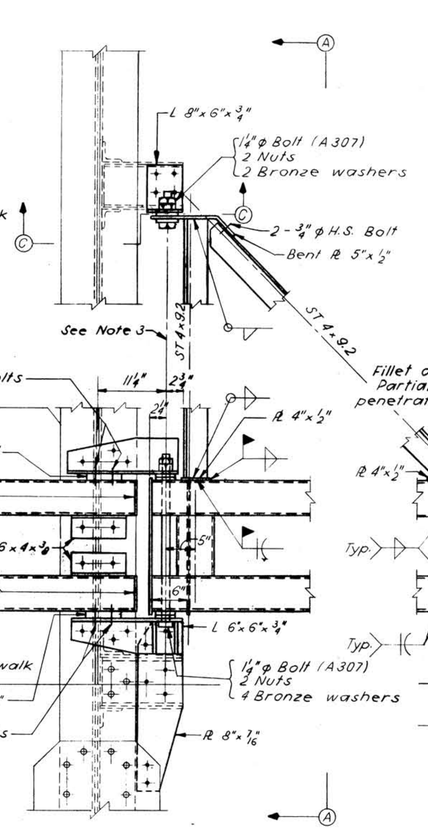

VIEW B - B

BARRIER GATE ELEVATION

Scale: 1" = 1'-0"

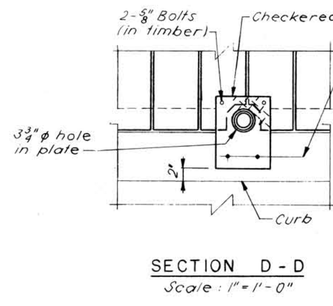

SECTION D - D

Scale: 1" = 1'-0"

NOTE:
Cut holes in checker plate and timber for gate pipe.

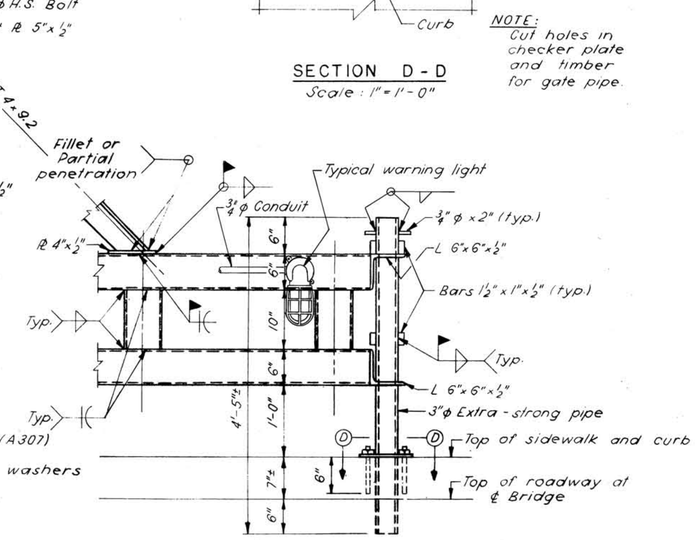

NOTES:

1. Barrier gate fillet and partial penetration welds shall be 3/16".
2. All holes for 1¼"ϕ hinge bolts shall not exceed 1 9/32"ϕ except in bronze washers.
3. Bronze washers shall be 3½"ϕ x ½" thick and shall conform to ASTM B22, Alloy 905.

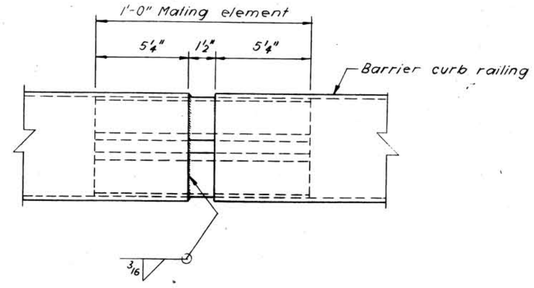

RAILING EXPANSION JOINT

Scale: 3" = 1'-0"

NOTES:

1. = Drill 11/16"ϕ holes and ream to 13/16"ϕ for ¾"ϕ H.S. Bolt, unless otherwise noted.

All work on this Sheet to be paid for under the Item 563.5, Bridge Railing E, except as noted.

NEW HAMPSHIRE DEPARTMENT OF PUBLIC WORKS AND HIGHWAYS AND STATE OF MAINE DEPARTMENT OF TRANSPORTATION

BRIDGE NO. 247/084 (MEMORIAL BRIDGE)
ROUTE US 1 OVER THE PISCATAQUA RIVER

BARRIER GATE AND RAILING EXPANSION JOINT

HARDESTY & HANOVER CONSULTING ENGINEERS NEW YORK, N.Y.	SCALE: AS NOTED DR. U.U. APPR. C.J.E. DATE: MAY 4, 1981	NEW HAMPSHIRE PROJECT P-3392 SHEET 8 OF 38

FILE NUMBER	FEDERAL PROJECT	SHEET NO.	TOTAL SHEETS
~~4-14-4-10~~ 1-18-1-3	BHF-001-1(58)	8	38

Des. GJR
Drw. U.U.
Chk. C.J.E.

Proj. Engr. Eugene J. Tulish

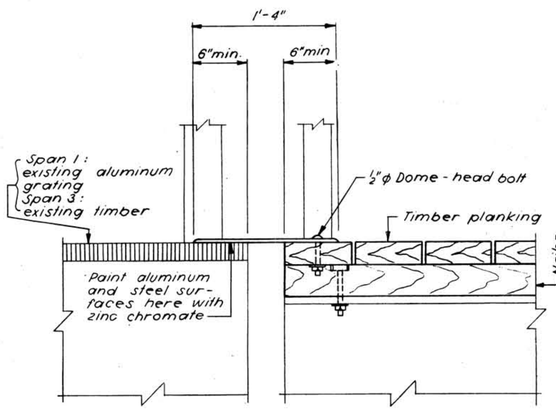

NOTE:
For location of Section G-G see Sheet 7.

SECTION G-G
Scale: 1½" = 1'-0"

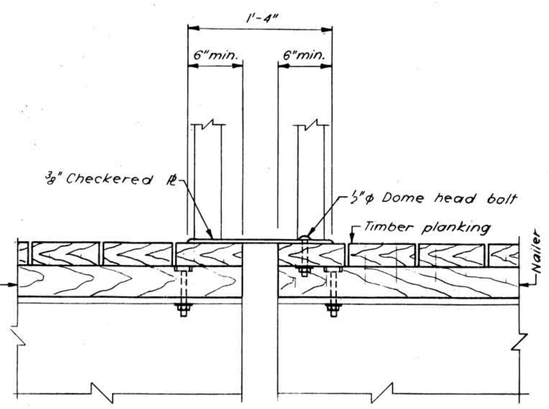

NOTE:
For location of Section H-H see Sheet 7.

SECTION H-H
Scale: 1½" = 1'-0"

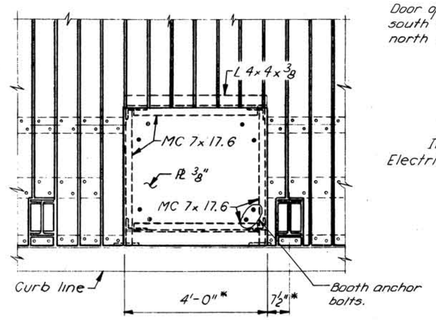

BOOTH FRAMING PLAN SIDEWALK LEVEL
Scale: ½" = 1'-0"

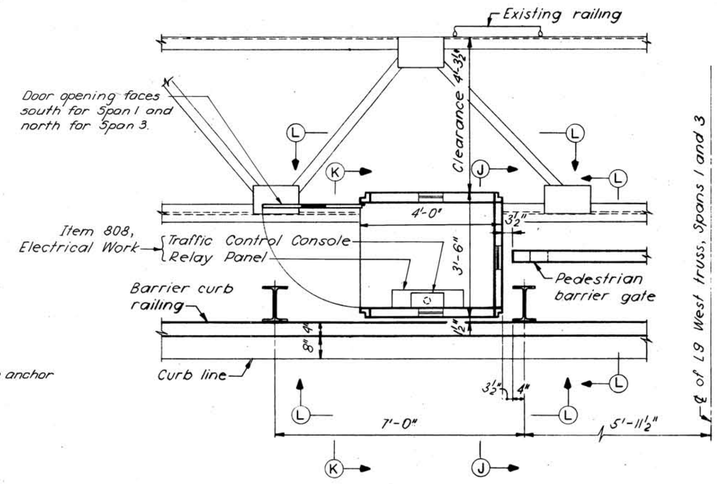

BOOTH PLAN
Scale: ½" = 1'-0"

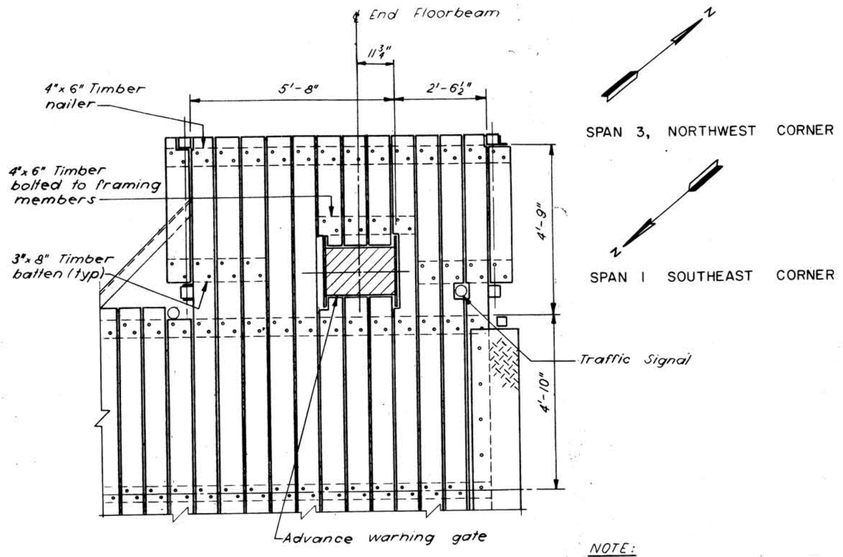

NOTE:
All advance warning gate platform timber to be paid for under Item 568.1, Structural Timber (Sidewalks and Platforms).
For moisture barriers between timbers, and asphaltic primer between timber and steel and concrete contact surfaces, see Sheet 6.
For location of advance warning gate and traffic signal, see Sheet 4.

ADVANCE WARNING GATE PLATFORM
Scale: ½" = 1'-0"

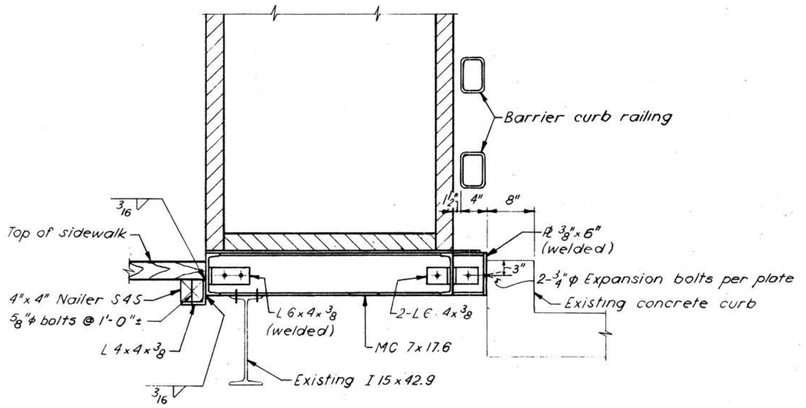

SECTION J-J
Scale: 1" = 1'-0"

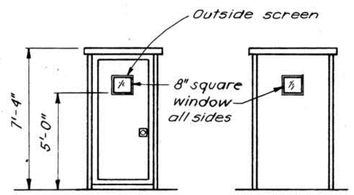

VIEW K-K
No scale.

VIEW L-L
No scale.

NOTES:
Holes = 13/16"φ
Bolts = ¾" H.S.
* Dimensions may vary to suit prefabricated house anchorages.
Gate tenders' booths and framing to be paid for under Item 801, Gate Tenders' Booths. Tool Box and Utility Shed.

Proj. Engr. Eugene S. Tulich

Des. C.J.R.
Drw. V.V.
Chk. E.S.T.

1-18-1-3

NEW HAMPSHIRE DEPARTMENT OF PUBLIC WORKS AND HIGHWAYS
AND
STATE OF MAINE DEPARTMENT OF TRANSPORTATION

BRIDGE NO. 247/084 (MEMORIAL BRIDGE)
ROUTE US 1 OVER THE PISCATAQUA RIVER

GATE TENDERS' BOOTHS AND MISCELLANEOUS DETAILS

HARDESTY & HANOVER CONSULTING ENGINEERS NEW YORK, N.Y.	SCALE: AS NOTED DR. V.V. APPR. C.J.R. DATE: MAY 4, 1981	NEW HAMPSHIRE PROJECT P-3392 SHEET 9 OF 38

FILE NUMBER	FEDERAL PROJECT	SHEET NO.	TOTAL SHEETS
~~4-14-4-10~~	BHF-001-1(58)	9	38

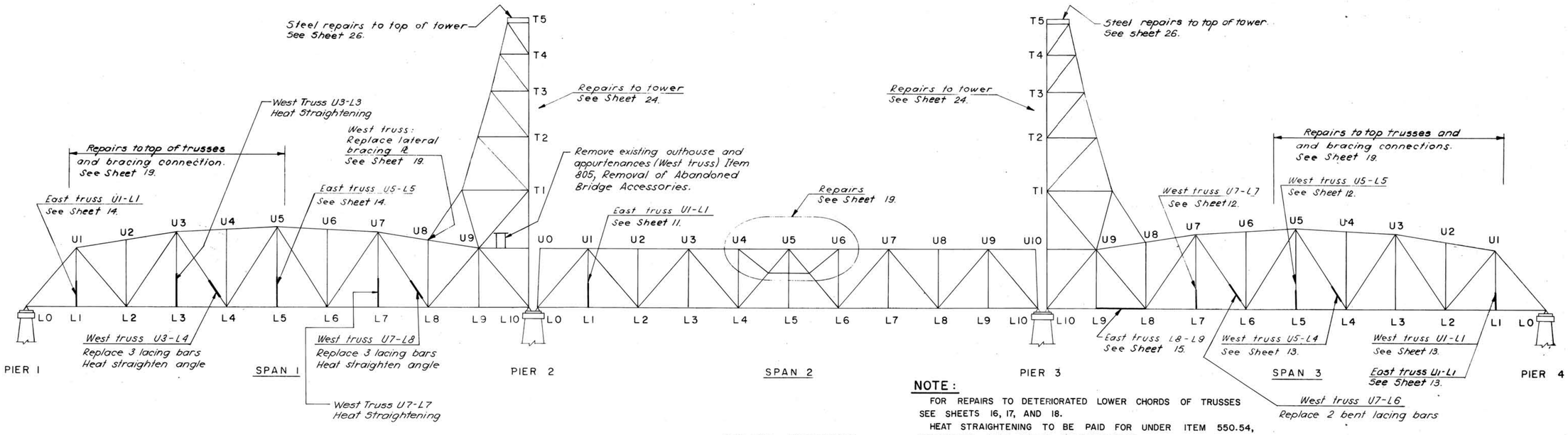

TRUSS REPAIRS

Scale: 1"-30'

NOTE:

FOR REPAIRS TO DETERIORATED LOWER CHORDS OF TRUSSES SEE SHEETS 16, 17, AND 18.

HEAT STRAIGHTENING TO BE PAID FOR UNDER ITEM 550.54, STRUCTURAL STEEL (HEAT STRAIGHTENING).

REPAIRS TO TRUSS WEB MEMBERS OTHER THAN HEAT STRAIGHTENING TO BE PAID FOR UNDER ITEM 550.40, STRUCTURAL STEEL (REHAB. TRUSS MEMBERS).

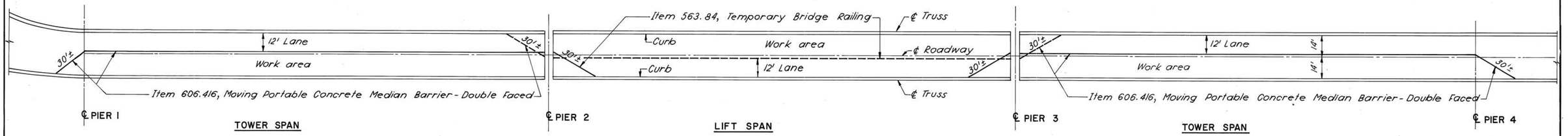

TYPICAL MAINTENANCE OF TRAFFIC FOR TRUSS REPAIRS

Scale: 1" = 30'

NOTE:

JERSEY TYPE PORTABLE CONCRETE BARRIERS TO BE PAID FOR UNDER ITEM 606.416, MOVING PORTABLE CONCRETE MEDIAN BARRIER - DOUBLE FACED.

TRAFFIC CONTROL TO BE PAID FOR UNDER ITEM 618.109, UNIFORMED OFFICERS AND FLAGMAN.

MAINTENANCE OF TRAFFIC TO BE PAID FOR UNDER ITEM 619.1, MAINTENANCE OF TRAFFIC INCLUDING DUST LAYING.

CONSTRUCTION SIGNS, CONES AND OTHER WARNING DEVICES TO BE PAID FOR UNDER ITEM 619.2, CONSTRUCTION SIGNS AND WARNING DEVICES.

NOTE

1. Item 563.84, Temporary Bridge Railing on lift span
2. Item 606.416, Moving Portable Concrete Median Barrier - Double Faced on tower spans and approaches.
3. Typical barrier placement is shown for the tower and lift spans.
4. Six one lane closures will be permitted for repairs on one span at a time. During these closures vehicular traffic will be controlled by the temporary traffic signals.

Des. CJR
Drw. V.V.
Chk. E.J.T.

Proj. Engr. Eugene S. Tulisch

1-18-1-3

NEW HAMPSHIRE DEPARTMENT OF PUBLIC WORKS AND HIGHWAYS
AND
STATE OF MAINE DEPARTMENT OF TRANSPORTATION

BRIDGE NO. 247/084 (MEMORIAL BRIDGE)
ROUTE US 1 OVER THE PISCATAQUA RIVER

MAINTENANCE OF TRAFFIC FOR TRUSS REPAIRS

HARDESTY & HANOVER CONSULTING ENGINEERS NEW YORK, N.Y.	SCALE: AS NOTED DR. V.V. APPR. E.J.T. DATE: MAY 4, 1981	NEW HAMPSHIRE PROJECT P-3392 SHEET 10 OF 38

FILE NUMBER	FEDERAL PROJECT	SHEET NO.	TOTAL SHEETS
~~4-14-4-15~~	BHF - 001 - 1(58)	10	38

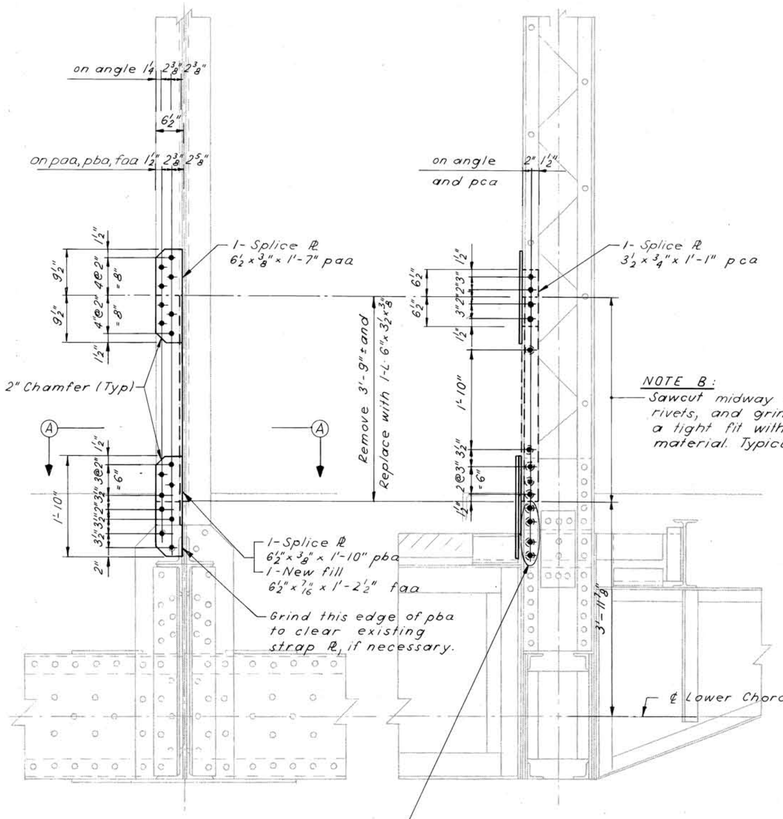

WEST ELEVATION

SOUTH ELEVATION

EAST ELEVATION

NOTE A:
Prior to sawcutting the damaged angles, the Contractor shall remove as necessary rivets adjacent to the cut line in order to separate the plies and protect the undamaged material. Any damage to material that is to remain in the composite member shall be replaced by the Contractor at no cost to the Department. Fill the open holes with 7/8" ϕ H.S. Bolts. Typical.

NOTE B:
Sawcut midway between rivets, and grind for a light fit with new material. Typical.

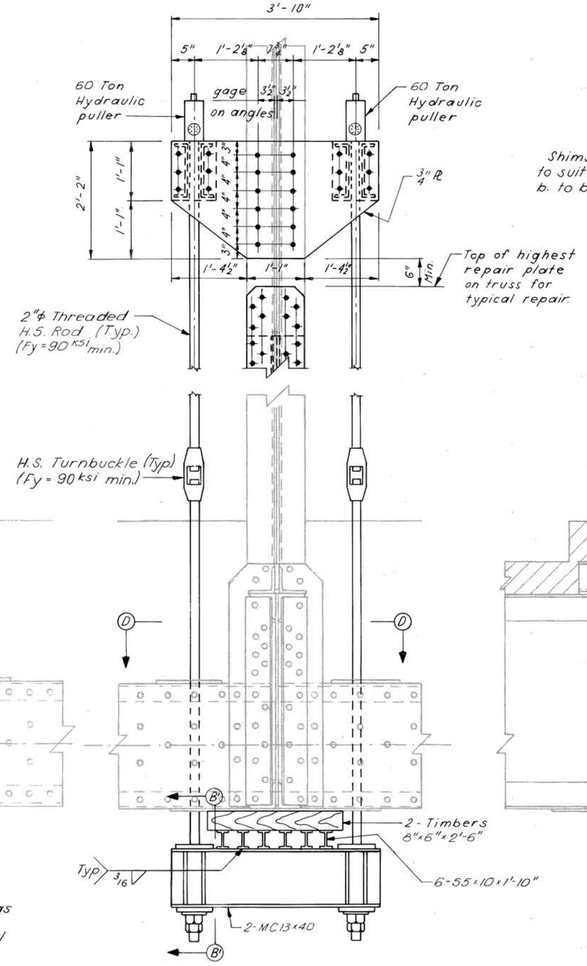

ELEVATION ON FLOORBEAM SIDE

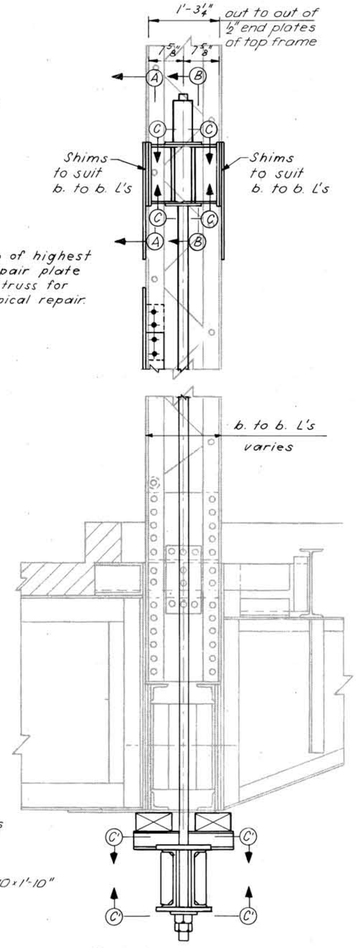

ELEVATION TRANSVERSE TO ROADWAY

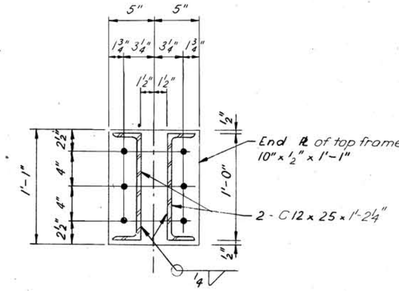

SECTION A-A
No scale.

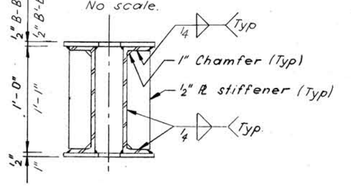

SECTION B-B, B'-B'
No scale

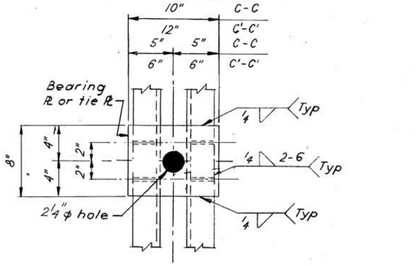

SECTION C-C, C'-C'
No scale.

Use construction supports for the following truss hangers.

Span	Truss	Member	New Steel Wgt.
1	East	U1-L1	1760
2	East	U1-L1	120
3	West	U1-L1	520
3	East	U1-L1	320
3	West	U5-L5	660
3	West	U7-L7	420

Total weight = 3800

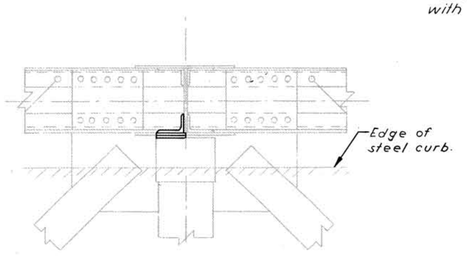

SECTION A-A

SPAN 2 - EAST TRUSS

MEMBER U1-L1

Scale: 3/4" = 1'-0"

NOTES:

- ⊕ = K.O. existing 7/8" ϕ rivet and replace with 7/8" H.S. Bolt. Drill holes in new material as noted below.
- • = Drill 15/16" ϕ holes and ream to 15/16" ϕ for 7/8" ϕ H.S. Bolts, except temporary pieces, which may be drilled full size.

Fill all open holes with 7/8" ϕ H.S. bolts (Typical).
All new material to be AASHTO M183 (ASTM A36)
All work, Sheets 11-14 inclusive, to be paid for under Item 550.40, Structural Steel (Rehab. Truss Members), except heat straightening to be paid for under Item 550.54, Structural Steel (Heat Straightening).

TYPICAL CONSTRUCTION SUPPORTS FOR TRUSS HANGERS

Scale: 3/4" = 1'-0"

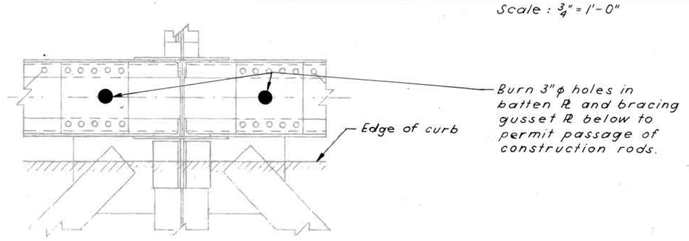

SECTION D-D

Des. CJR
Drw VV
Chk. ESF

Proj. Engr. Eugene S. Tulich

1-18-1-3

NEW HAMPSHIRE DEPARTMENT OF PUBLIC WORKS AND HIGHWAYS
AND
STATE OF MAINE DEPARTMENT OF TRANSPORTATION

BRIDGE NO. 247/084 (MEMORIAL BRIDGE)
ROUTE US 1 OVER THE PISCATAQUA RIVER

TRUSS WEB REPAIRS - 1

HARDESTY & HANOVER
CONSULTING ENGINEERS
NEW YORK, N.Y.

SCALE: AS NOTED
DR. VV APPR. C.V.E
DATE: MAY 4, 1981

NEW HAMPSHIRE PROJECT P-3392
SHEET 11 OF 38

FILE NUMBER	FEDERAL PROJECT	SHEET NO.	TOTAL SHEETS
~~4-14-4-10~~	BHF-001-1(58)	11	38

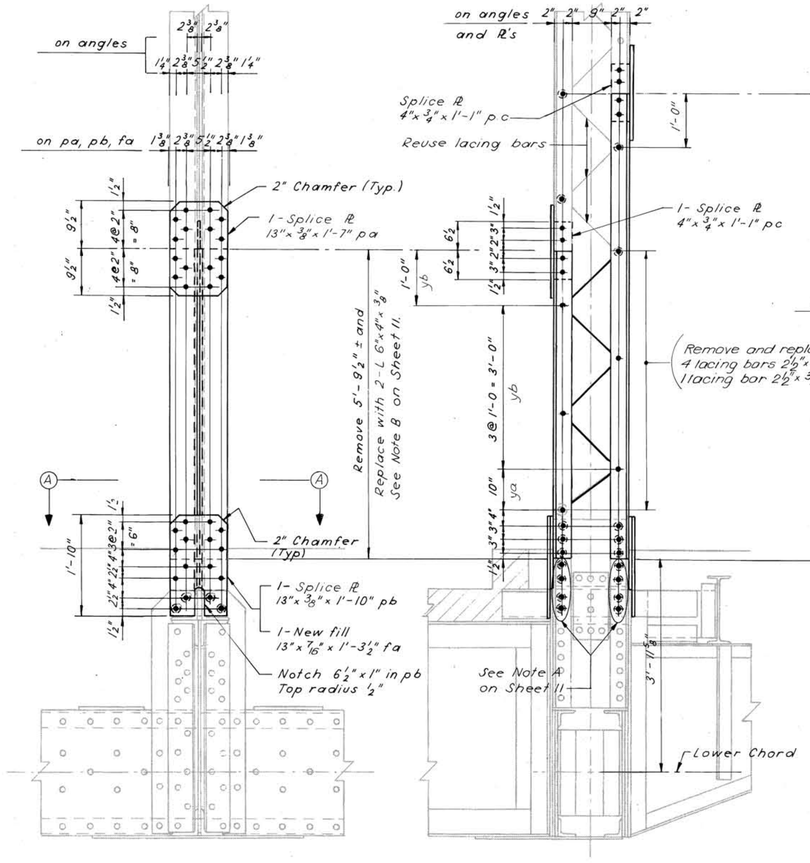

EAST ELEVATION

NORTH ELEVATION

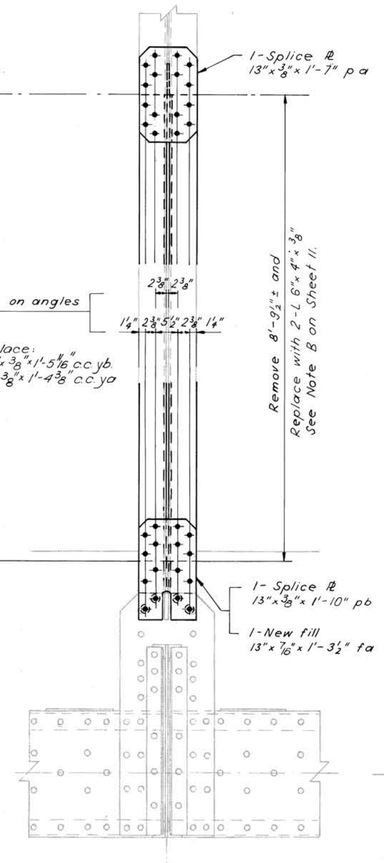

WEST ELEVATION

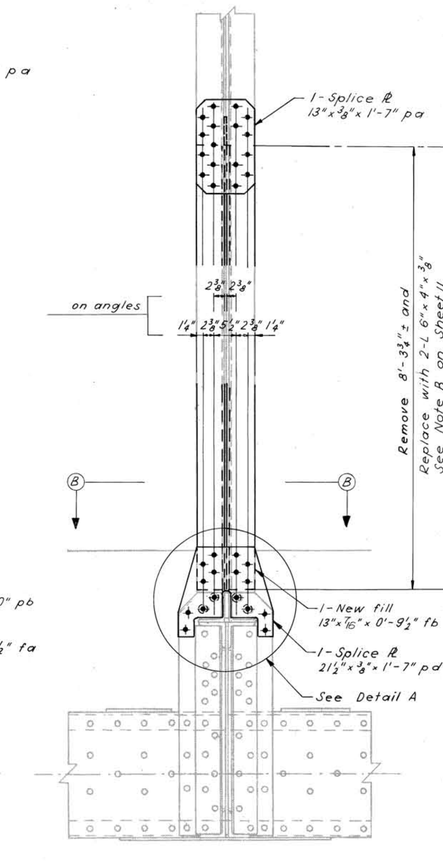

EAST ELEVATION

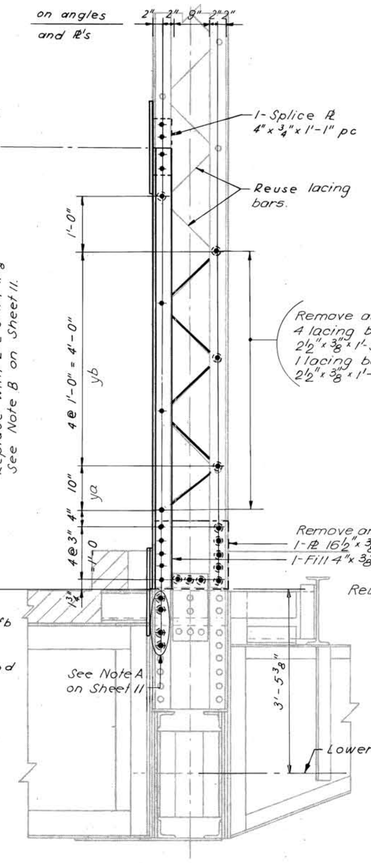

NORTH ELEVATION

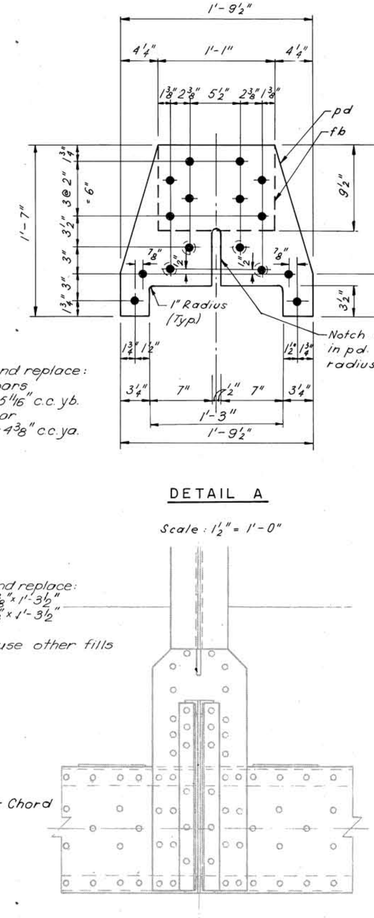

DETAIL A

Scale: 1 1/2" = 1'-0"

WEST ELEVATION

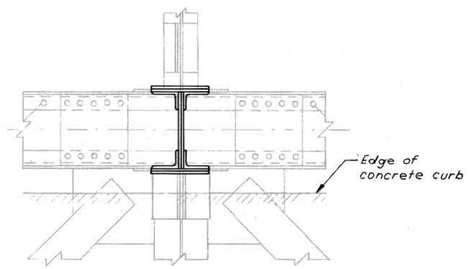

SECTION A - A

SPAN 3 - WEST TRUSS

MEMBER U5 - L5

Scale: 3/4" = 1'-0"

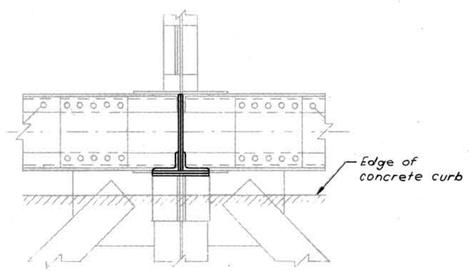

SECTION B - B

SPAN 3 - WEST TRUSS

MEMBER U7 - L7

Scale: 3/4" = 1'-0"

SEE NOTES ON SHEET 11.

Des. CJR
Drw. DVV
Chk. EJT

Proj. Engr. Eugene J. Tulich

1-18-1-3

NEW HAMPSHIRE DEPARTMENT OF PUBLIC WORKS AND HIGHWAYS AND STATE OF MAINE DEPARTMENT OF TRANSPORTATION

BRIDGE NO. 247/084 (MEMORIAL BRIDGE) ROUTE US I OVER THE PISCATAQUA RIVER

TRUSS WEB REPAIRS - 2

HARDESTY & HANOVER CONSULTING ENGINEERS NEW YORK, N.Y.	SCALE: AS NOTED DR. VV APPR. CJR DATE: MAY 4, 1981	NEW HAMPSHIRE PROJECT P-3392 SHEET 12 OF 38

FILE NUMBER	FEDERAL PROJECT	SHEET NO.	TOTAL SHEETS
~~4-14-4-19~~	BHF - 001 - 1(58)	12	38

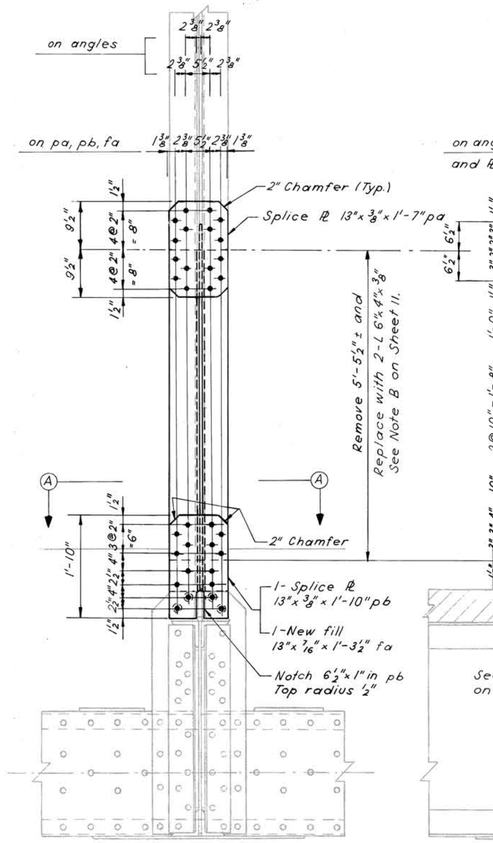

EAST ELEVATION

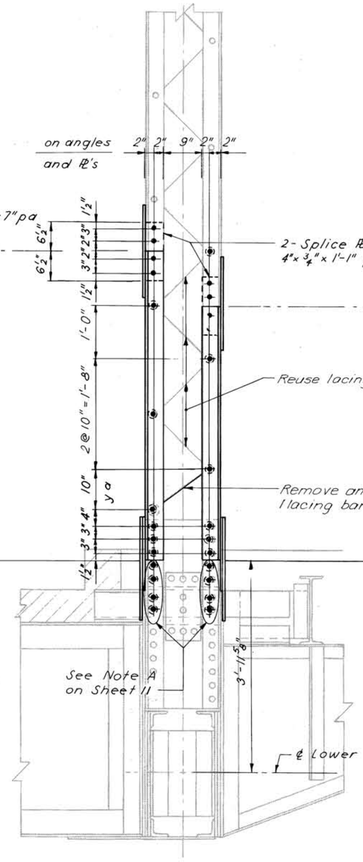

NORTH ELEVATION

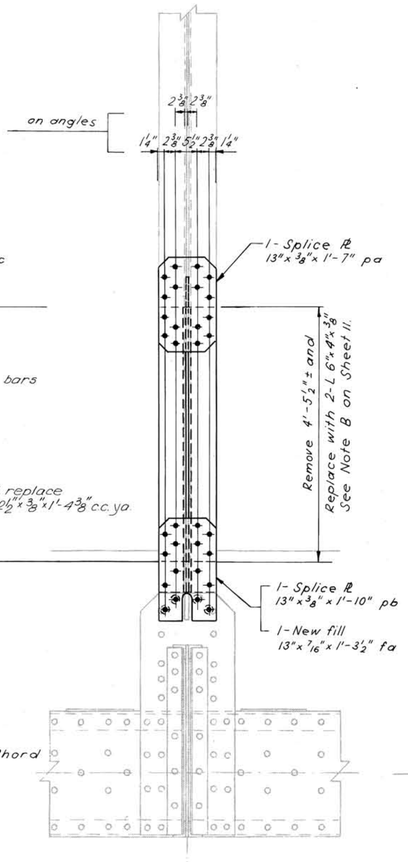

WEST ELEVATION

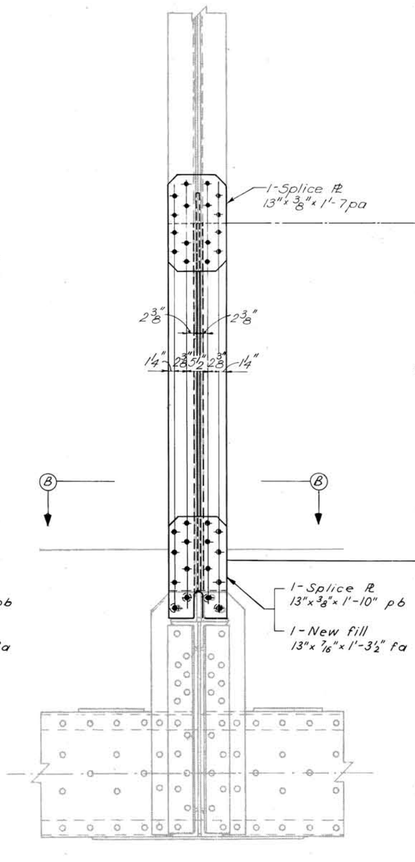

WEST ELEVATION

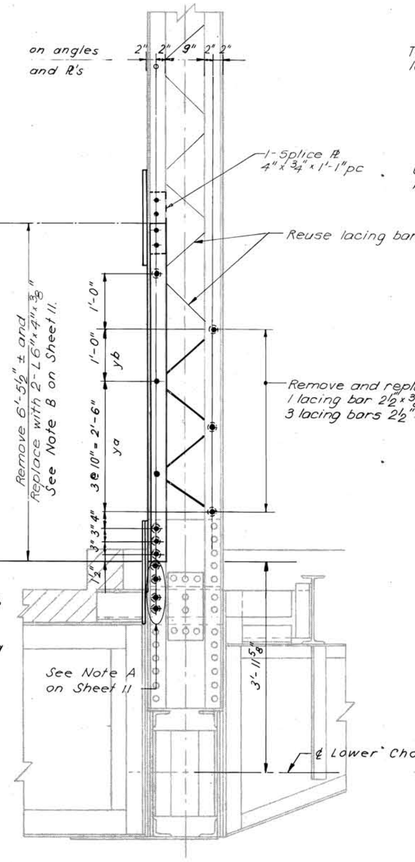

SOUTH ELEVATION

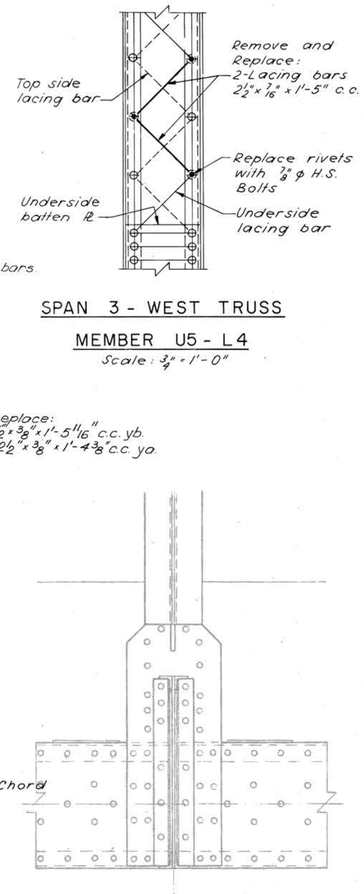

EAST ELEVATION

SPAN 3 - WEST TRUSS

MEMBER U5 - L4

Scale: 3/4" = 1'-0"

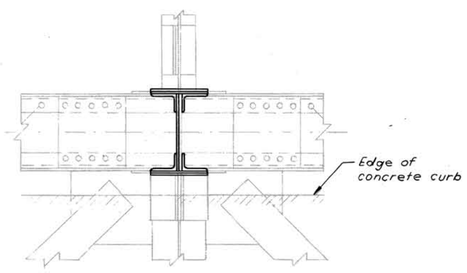

SECTION A - A

SPAN 3 - WEST TRUSS

MEMBER U1 - L1

Scale: 3/4" = 1'-0"

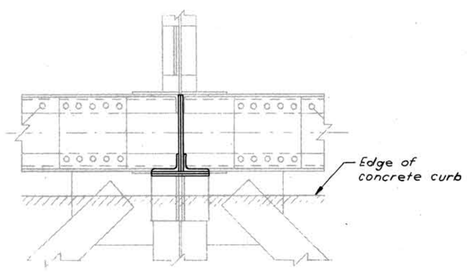

SECTION B - B

SPAN 3 - EAST TRUSS

MEMBER U1 - L1

Scale: 3/4" = 1'-0"

SEE NOTES ON SHEET 11.

NEW HAMPSHIRE DEPARTMENT OF PUBLIC WORKS AND HIGHWAYS
AND
STATE OF MAINE DEPARTMENT OF TRANSPORTATION

BRIDGE NO. 247/084 (MEMORIAL BRIDGE)
ROUTE US 1 OVER THE PISCATAQUA RIVER

TRUSS WEB REPAIRS - 3

HARDESTY & HANOVER CONSULTING ENGINEERS NEW YORK, N.Y.	SCALE: 3/4" = 1'-0" DR. V.V. APPR. C.J.R. DATE: MAY 4, 1981	NEW HAMPSHIRE PROJECT P-3392 SHEET 13 OF 38

Des. CJR
Drw. V.V.
Chk. E.C.T.

Proj.Engr. Eugene C. Tudisch

1-18-1-3

FILE NUMBER	FEDERAL PROJECT	SHEET NO.	TOTAL SHEETS
4-14-4-10	BHF - 001 - 1(58)	13	38

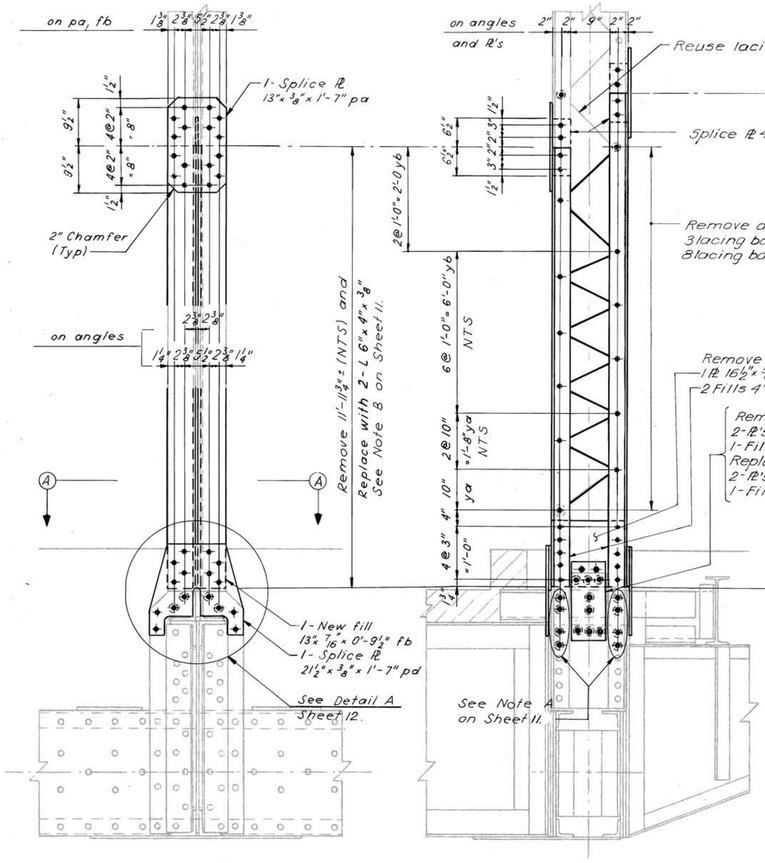

WEST ELEVATION

SOUTH ELEVATION

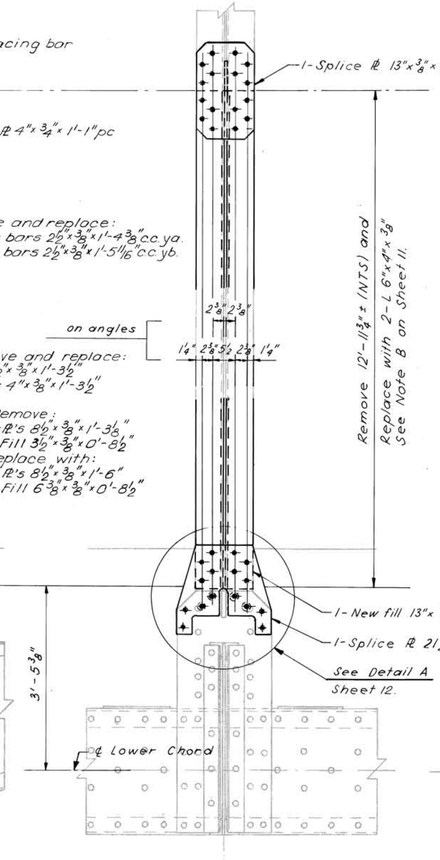

EAST ELEVATION

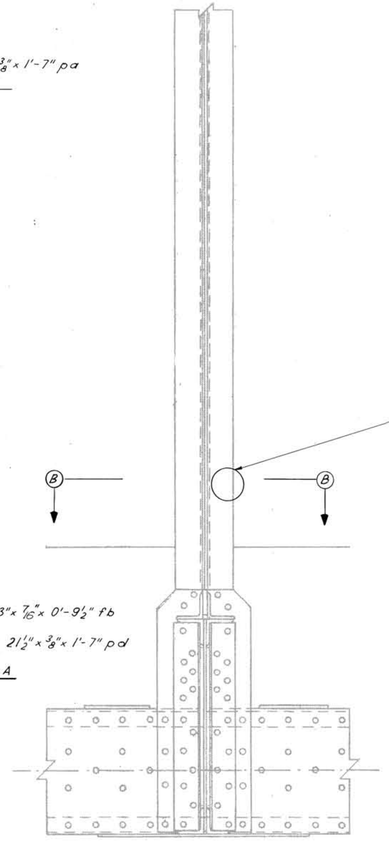

WEST ELEVATION

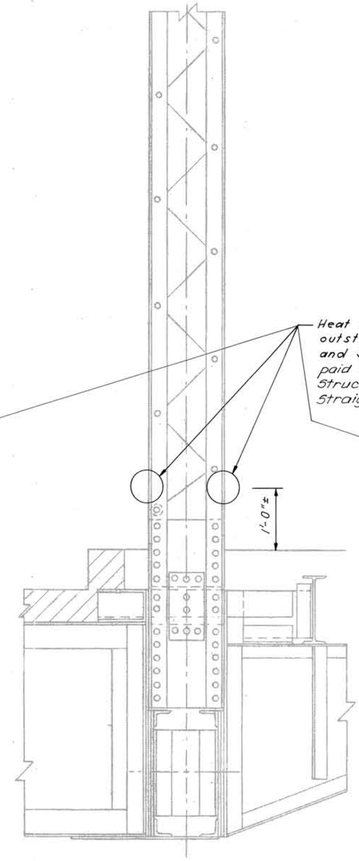

SOUTH ELEVATION

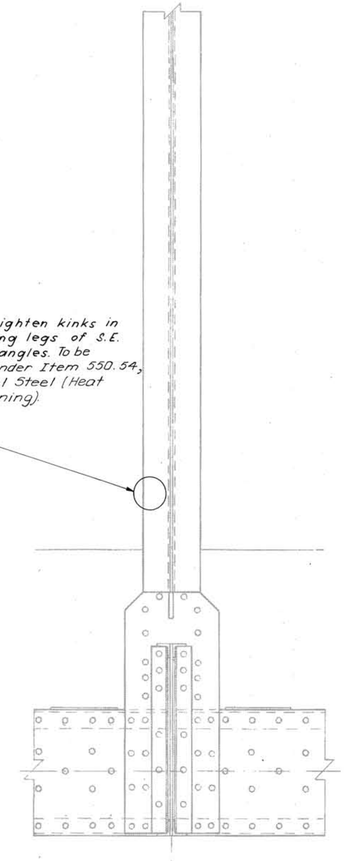

EAST ELEVATION

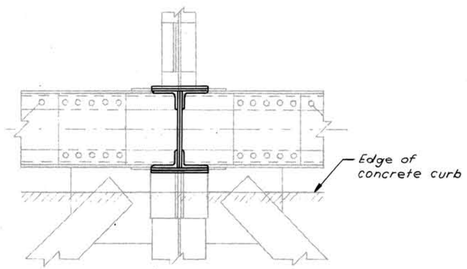

SECTION A - A

SPAN I - EAST TRUSS

MEMBER U1 - L1

Scale: 3/4" = 1'-0"

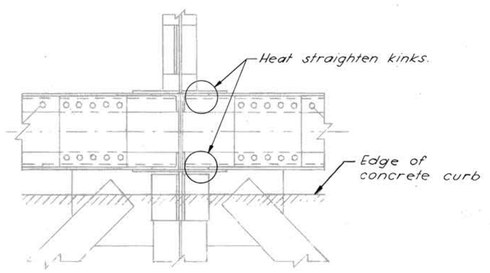

SECTION B - B

SPAN I - EAST TRUSS

MEMBER U5 - L5

Scale: 3/4" = 1'-0"

SEE NOTES ON SHEET 11.

NEW HAMPSHIRE DEPARTMENT OF PUBLIC WORKS AND HIGHWAYS
AND
STATE OF MAINE DEPARTMENT OF TRANSPORTATION

BRIDGE NO. 247/084 (MEMORIAL BRIDGE)
ROUTE US 1 OVER THE PISCATAQUA RIVER

TRUSS WEB REPAIRS - 4

HARDESTY & HANOVER CONSULTING ENGINEERS NEW YORK, N.Y.	SCALE: 3/4" = 1'-0" DR. VV APPR. C.V.E DATE: MAY 4, 1981	NEW HAMPSHIRE PROJECT P-3392 SHEET 14 OF 38

Des. CJR
Drw. VV
Chk. E.F.T.

Proj. Engr. Eugene A. Tulik

1-18-1-3

FILE NUMBER	FEDERAL PROJECT	SHEET NO.	TOTAL SHEETS
~~4-14-4-10~~	BHF-001-1(58)	14	38

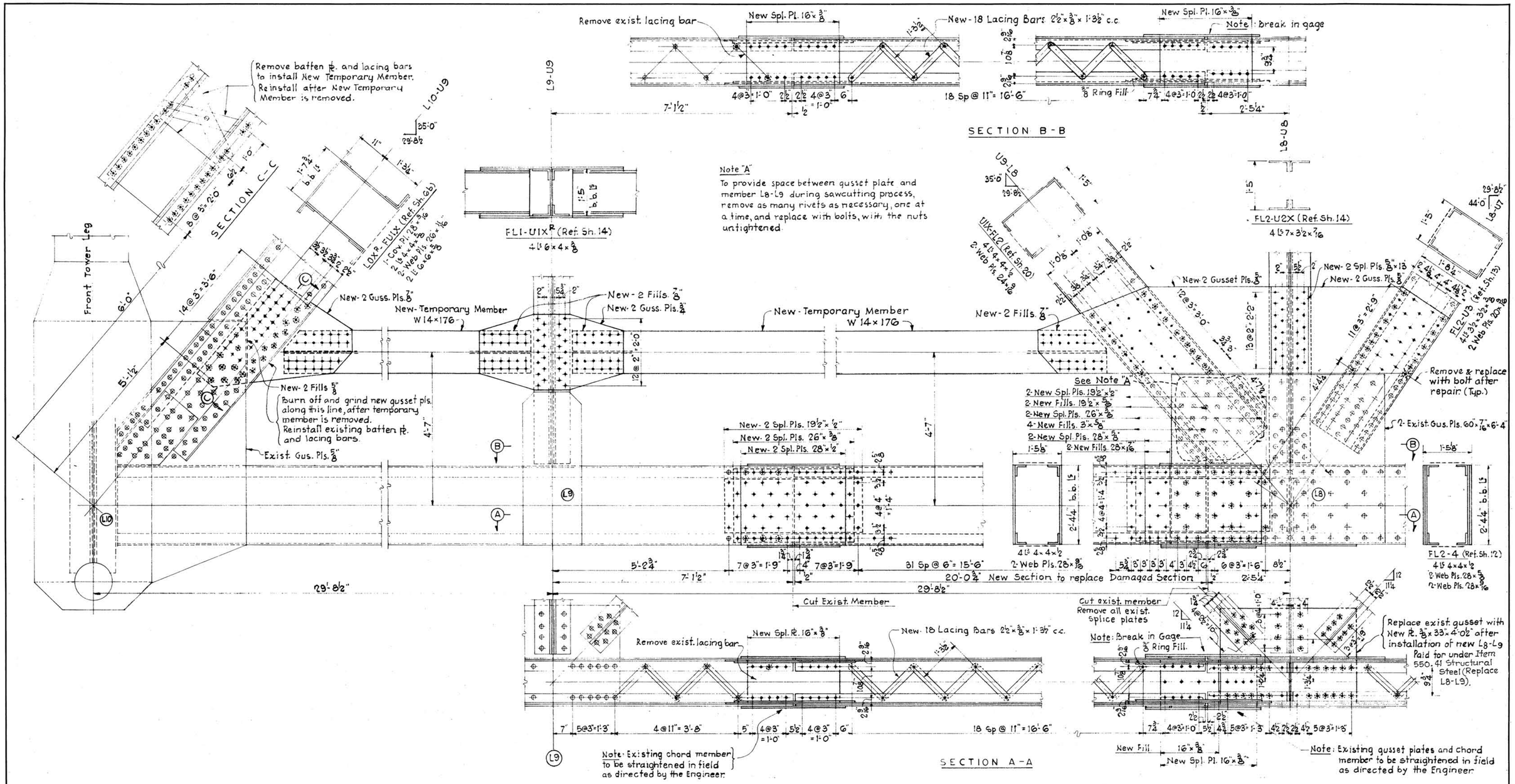

New Steel = 6,200 lbs.
Temporary Steel = 12,700 lbs.

REPLACE BOTTOM CHORD MEMBER L8-L9
NORTH TOWER SPAN - EAST TRUSS

Note: Install New Temporary Members prior to replacement of Bottom Chord L8-L9

New Temporary Members and their connections to be removed, except as noted, after the new chord member is installed, and remaining holes to be filled with bolts.

One lane of traffic in the far lane is permitted during construction.

NOTES

⊕ = K.O. existing ⅞"ø rivet and replace with ⅞"ø H.S. Bolt (Item 550.41)

✦ = Drill 1 1/16"ø holes and ream to 15/16"ø for ⅞"ø H.S. Bolts - except in lacing bars which may be punched full size

All new material - AASHTO M183 (ASTM A36)

All work on this sheet to be paid for under Item 550.41, Structural Steel (Replace L8-L9)

Reference Drawings:
American Bridge Co. Sheets 6b, 12 & 14
1-18-1-3

Des. E.F.S.
Drw. E.F.S.
Chk. W.W.C.

Proj. Engr. Eugene F. Sullivan

NEW HAMPSHIRE DEPARTMENT OF PUBLIC WORKS AND HIGHWAYS
AND
STATE OF MAINE DEPARTMENT OF TRANSPORTATION

BRIDGE NO. 247/084 (MEMORIAL BRIDGE)
ROUTE US 1 OVER THE PISCATAQUA RIVER

REPLACE CHORD MEMBER L8 - L9
SPAN 3 - EAST TRUSS

HARDESTY & HANOVER
CONSULTING ENGINEERS
NEW YORK, N.Y.

SCALE: ¾" = 1'-0"
DR. E.F.S. APPR. E.F.T.
DATE: MAY 4, 1981

NEW HAMPSHIRE PROJECT P-3392
SHEET 15 OF 38

FILE NUMBER	FEDERAL PROJECT	SHEET NO.	TOTAL SHEETS
~~4-14-4-10~~	BHF-001-1(58)	15	38

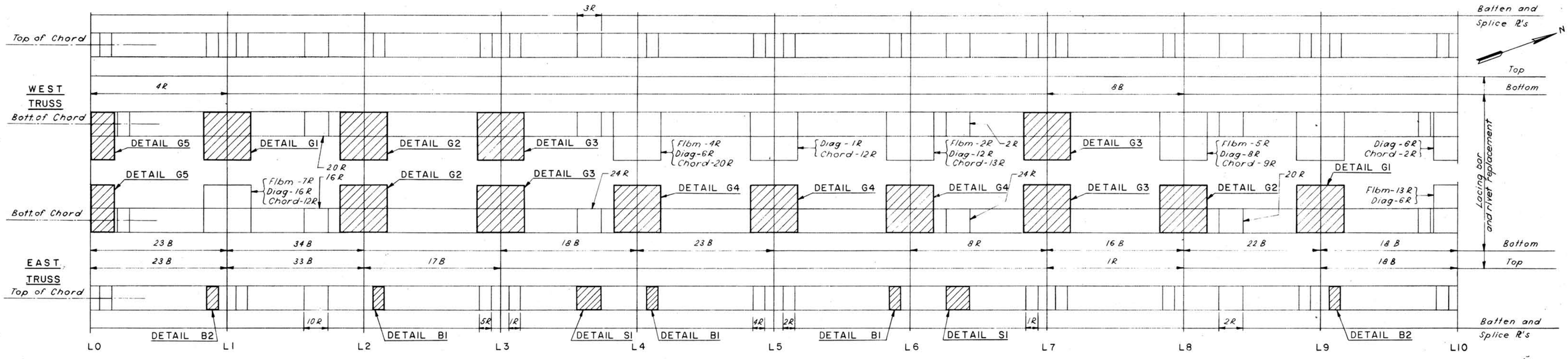

SPAN 1
No scale.

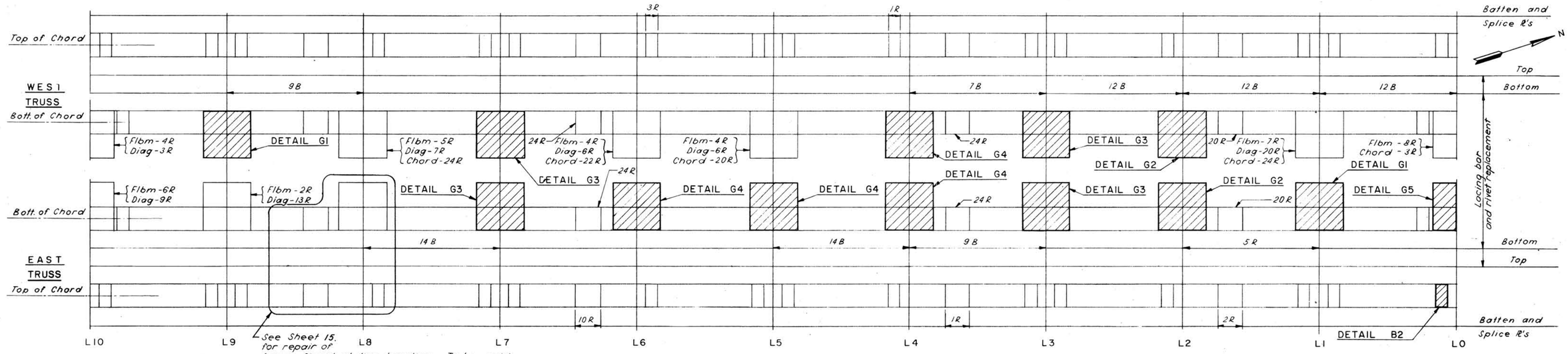

SPAN 3
No scale.

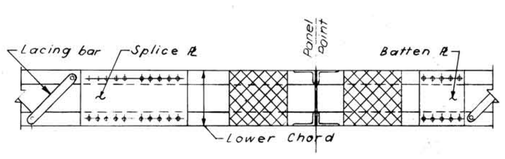

TOP OF LOWER CHORD
TYPICAL
Scale: ½"=1'-0"

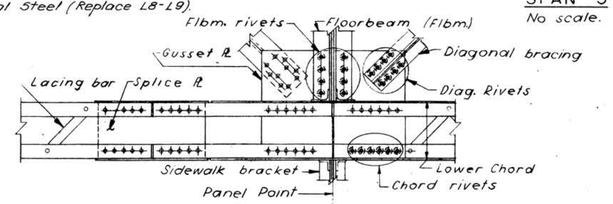

BOTTOM OF LOWER CHORD
TYPICAL
Scale: ½"=1'-0"

LEGEND AND NOTES:

* = K.O. Existing ⅞" φ rivet and replace with ⅞" φ H.S. Bolt.

Details G1 to G5, B1, B2 and S1 are on Sheet 18.

(Number)-R – Number of ⅞" φ Rivets to be K.O.'ed and replaced with ⅞" φ H.S. Bolts.

(Number)-B – Number of lacing bars to be removed and replaced with new bars.

All deteriorated rivets, batten plates, and lacing bars for repair or replacement will be marked by the Engineer in the field.

▨ – Existing plate to be removed and replaced with new steel.

All work on this Sheet, except as noted, to be paid for under Item 550.43, Structural Steel (Replace Rivets) and Item 550.44, Structural Steel (Rehab. Deteriorated Steel).

1-18-1-3

NEW HAMPSHIRE DEPARTMENT OF PUBLIC WORKS AND HIGHWAYS
AND
STATE OF MAINE DEPARTMENT OF TRANSPORTATION

BRIDGE NO. 247/084 (MEMORIAL BRIDGE)
ROUTE US 1 OVER THE PISCATAQUA RIVER

LOWER CHORD REPAIRS
SPANS 1 AND 3

HARDESTY & HANOVER
CONSULTING ENGINEERS
NEW YORK, N.Y.

SCALE: AS NOTED
DR. V.V. APPR. C.J.R.
DATE: MAY 4, 1981

NEW HAMPSHIRE
PROJECT P-3392
SHEET 16 OF 38

FILE NUMBER	FEDERAL PROJECT	SHEET NO.	TOTAL SHEETS
~~4-14-4-10~~	BHF-001-1(58)	16	38

Des. CJR
Drw. V.V.
Chk. E.S.T.

Proj. Engr. Eugene S. Trulich

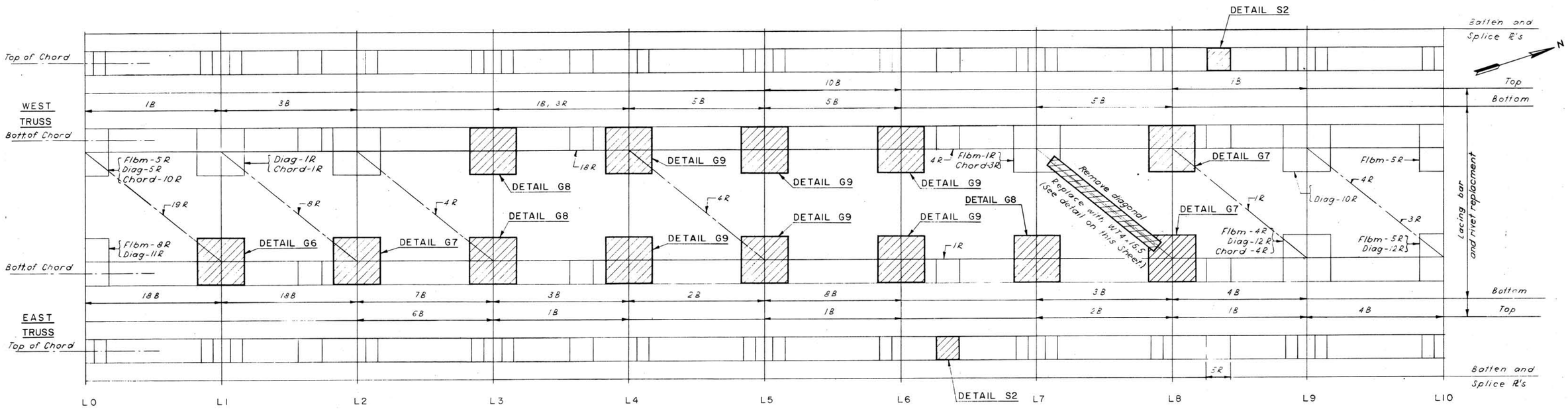

SPAN 2
No scale.

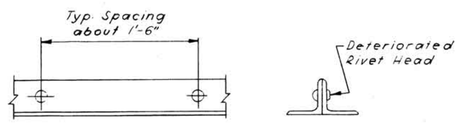

BRACING DIAGONAL RIVET REPLACEMENT

TYPICAL
No scale.

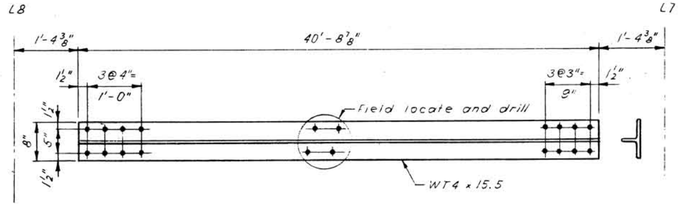

NEW DIAGONAL BRACE L7W - L8E
No scale.

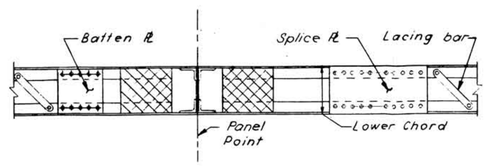

TOP OF LOWER CHORD

TYPICAL
Scale: 1/2" = 1'-0"

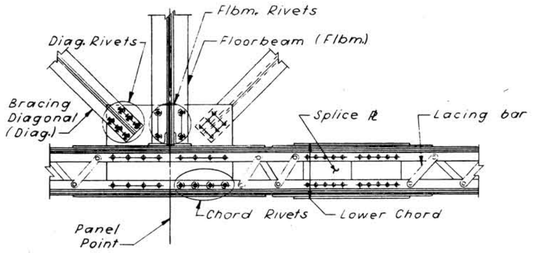

BOTTOM OF LOWER CHORD

TYPICAL
Scale: 1/2" = 1'-0"

LEGEND AND NOTES:

(Number)R - Number of 7/8" ϕ rivets to be K.O.ed and replaced with 7/8" ϕ H.S. Bolts.

(Number)B - Number of lacing bars to be removed and replaced with new bars.

All deteriorated rivets, batten plates and lacing bars for repair or replacement will be marked by the Engineer in the field.

● - Drill 11/16" ϕ holes and ream to 15/16" ϕ for 7/8" ϕ H.S. Bolts unless otherwise noted.

▨ - Existing plate to be removed and replaced with new steel.

Details G6 to G9 and S2 are shown on Sheet 18.

⊙ - K.O. existing 7/8" ϕ rivet and replace with 7/8" ϕ H.S. Bolt.

All work to be paid for under Item 550.43, Structural Steel (Replace Rivets) or Item 550.44, Structural Steel (Rehab. Deteriorated Steel).

NEW HAMPSHIRE DEPARTMENT OF PUBLIC WORKS AND HIGHWAYS
AND
STATE OF MAINE DEPARTMENT OF TRANSPORTATION

BRIDGE NO. 247/084 (MEMORIAL BRIDGE)
ROUTE US 1 OVER THE PISCATAQUA RIVER

LOWER CHORD REPAIRS SPAN 2

HARDESTY & HANOVER CONSULTING ENGINEERS NEW YORK, N.Y.	SCALE: AS NOTED DR. V.V. APPR. C.J.R. DATE: MAY 4, 1981	NEW HAMPSHIRE PROJECT P-3392 SHEET 17 OF 38

FILE NUMBER	FEDERAL PROJECT	SHEET NO.	TOTAL SHEETS
4-14-4-18	BHF-001-1(58)	17	38

1-18→1-3

Des. C.J.R.
Drw. V.V.
Chk. E.J.T.

Proj. Engr. Eugene J. Tulisch

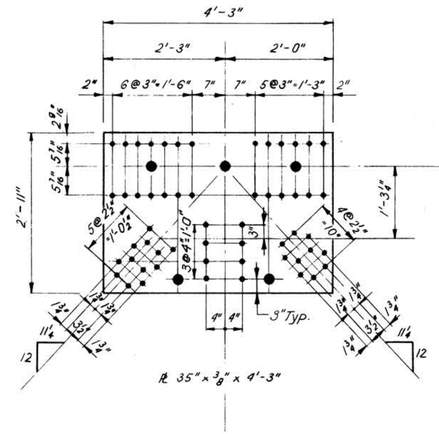

DETAIL G1
4 required

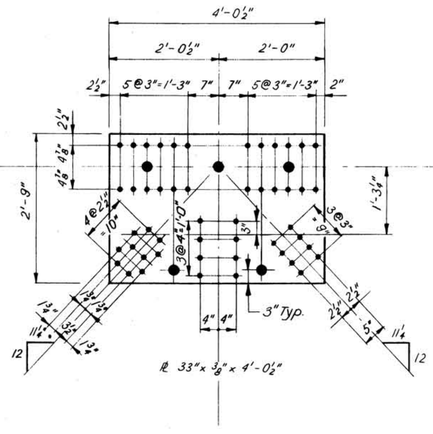

DETAIL G2
5 required

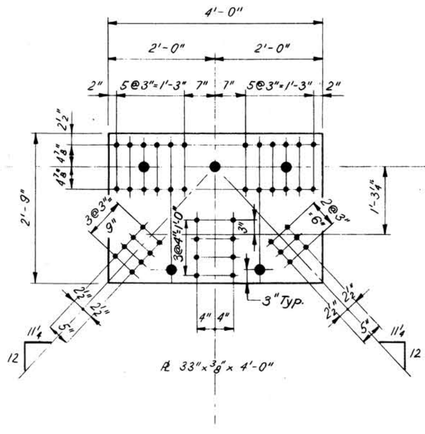

DETAIL G3
8 required

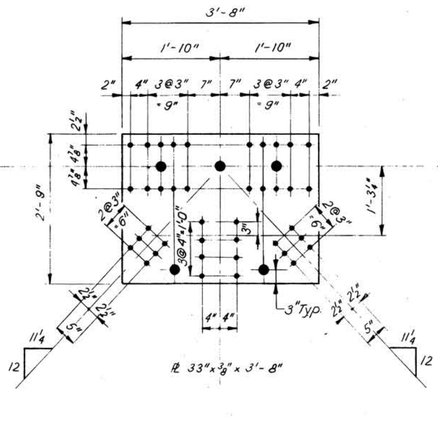

DETAIL G4
7 required

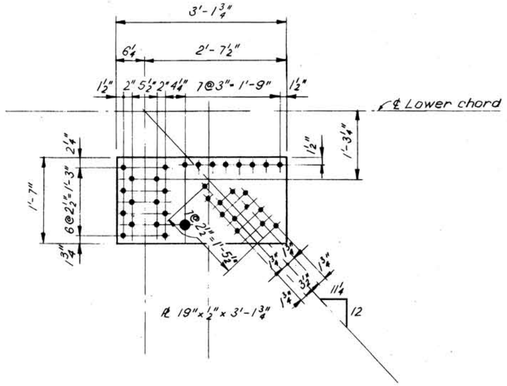

DETAIL G5
3 required

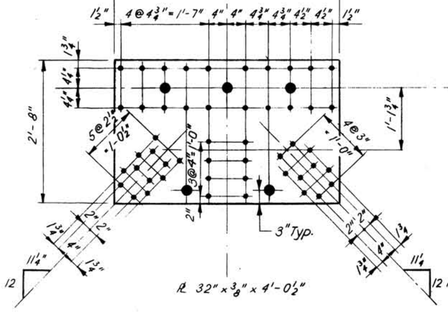

DETAIL G6
1 required

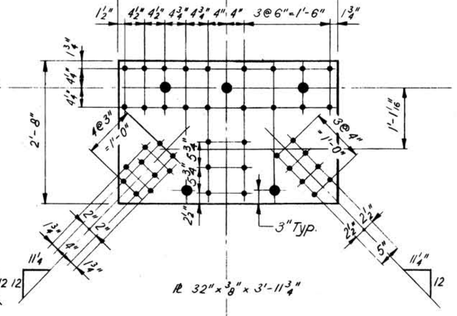

DETAIL G7
3 required

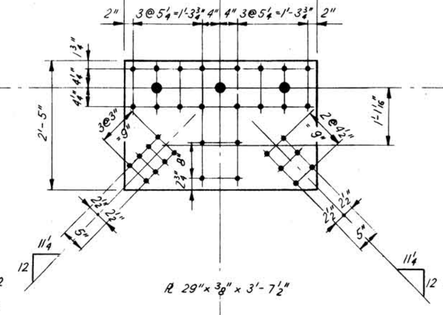

DETAIL G8
3 required

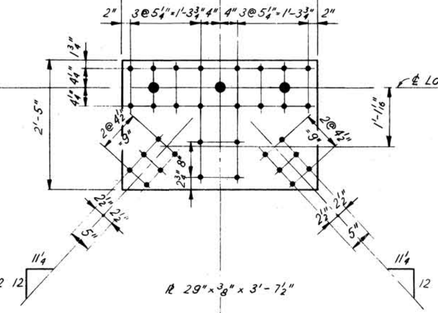

DETAIL G9
6 required

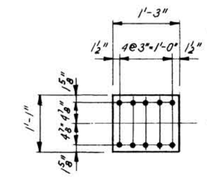

DETAIL B1
3 required

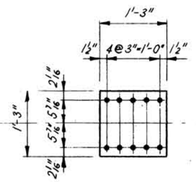

DETAIL B2
3 required

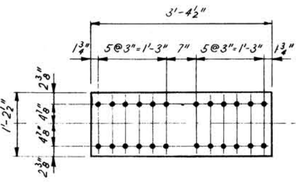

DETAIL S1
2 required

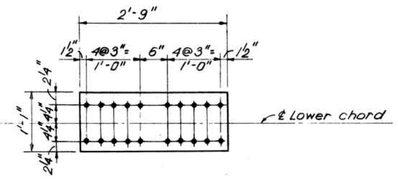

DETAIL S2
2 required

NOTES:

- • – Drill 11/16" ϕ holes and ream to 15/16" ϕ for ⅞" ϕ H.S. Bolts.
- ● – 2" ϕ drain holes

All work on this sheet to be paid for under Item 550.44, Structural Steel (Rehab. Deteriorated Steel.)

Des. CJR
Drw. V.V.
Chk. E.C.T.

Proj. Engr. Eugene J. Tulick

1-18-1-3

FILE NUMBER	FEDERAL PROJECT	SHEET NO.	TOTAL SHEETS
~~4-14-4-10~~	BHF-001-1(58)	18	38

NEW HAMPSHIRE DEPARTMENT OF PUBLIC WORKS AND HIGHWAYS
AND
STATE OF MAINE DEPARTMENT OF TRANSPORTATION

BRIDGE NO. 247/084 (MEMORIAL BRIDGE)
ROUTE US 1 OVER THE PISCATAQUA RIVER

TYPICAL BOTTOM LATERAL GUSSET DETAILS

HARDESTY & HANOVER
CONSULTING ENGINEERS
NEW YORK, N.Y.

SCALE: ¾" = 1'-0"
DR. V.V. APPR. C.J.R.
DATE: MAY 4, 1981

NEW HAMPSHIRE
PROJECT P-3392
SHEET 18 OF 38

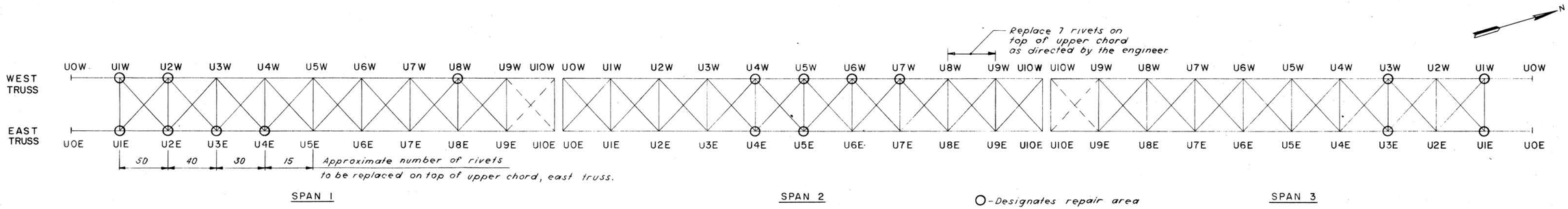

TRUSS UPPER CHORDS AND BRACING

Scale: 1" - 30'

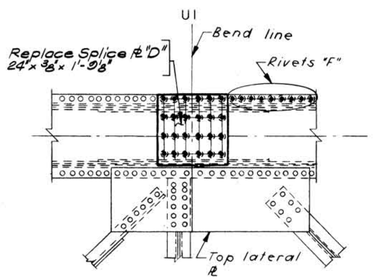

VIEW A - A

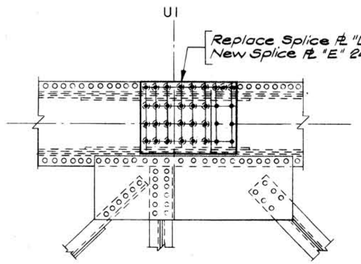

VIEW A' - A'

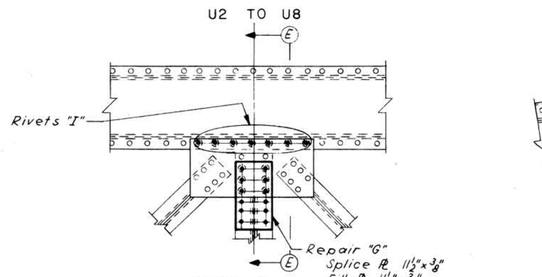

VIEW C - C

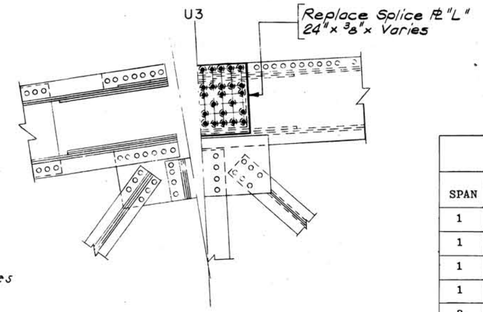

SECTION F - F

TYPICAL UPPER CHORD REPAIRS		
SPAN	PANEL POINT	DESCRIPTION
1	U1E	Replace Batten Plate "A"
1	U1E	Replace 6 Rivets "B"
1	U1W	Replace Bottom Lateral Plate "C"
1	U1W	Replace Splice Plate "D" with new Plate "E"
3	U1E	Replace Splice Plate "D"
3	U1W	Replace Splice Plate "D"
3	U1W	Replace 8 Rivets "F"
1	U2W	Make Repair "G"
1	U2E	Replace 5 Rivets "H" on Brace U2E-U3W
1	U2E	Replace 5 Rivets "K"
1	U8W	Replace Bottom Lateral Plate "J"
1	U3E	Replace Plate "L"
1	U4E	Make Repair "G"
3	U1E	Make Repair "M" to Brace U1E-U2W
3	U3E	Make Repair "M" to Brace U3E-U2W
3	U3W	Make Repair "G"
2	U7W	Make Repair "G"
2	U6W	Make Repair "G"
2	U5W	Make Repair "G"
2	U5E	Make Repair "G"
2	U4W	Make Repair "G"
2	U4E	Make Repair "G"

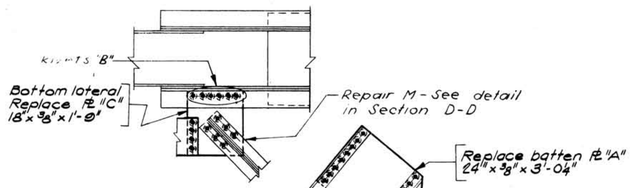

SECTION B-B

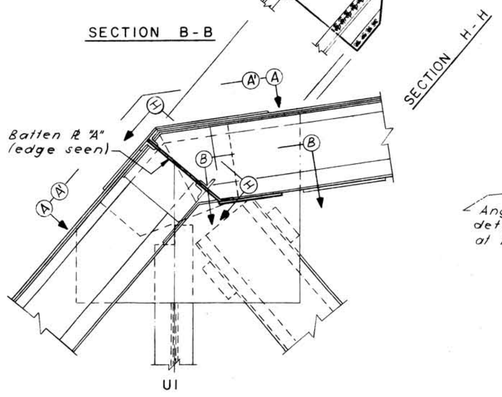

ELEVATION

TYPICAL REPAIRS AT U1

Scale: 1/2" = 1'-0"

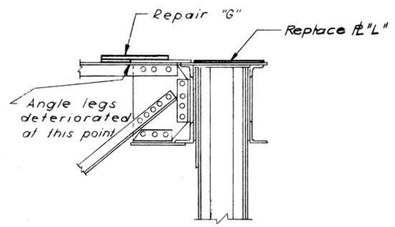

SECTION E - E, G - G

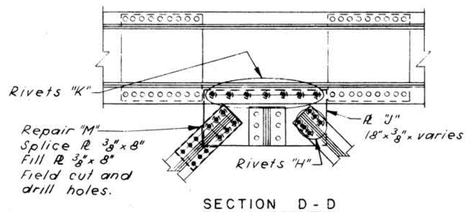

SECTION D - D

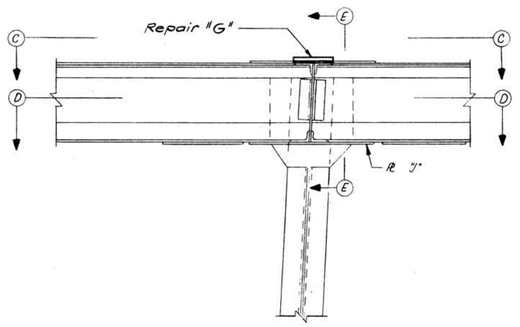

ELEVATION

TYPICAL REPAIRS AT U2 TO U8

Scale: 1/2" = 1'-0"

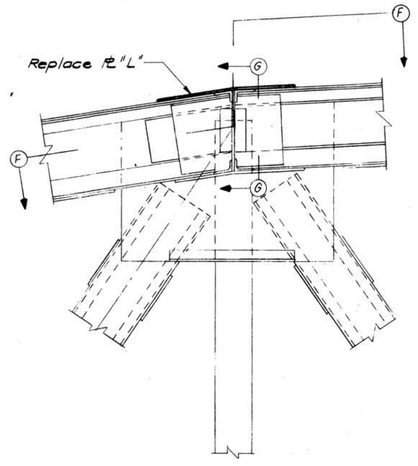

ELEVATION

TYPICAL REPAIRS AT U3

Scale: 1/2" = 1'-0"

NOTE:

All work to be paid for under Item 550.43, Structural Steel (Replace Rivets) or Item 550.44, Structural Steel (Rehab. Deteriorated Steel).

NEW HAMPSHIRE DEPARTMENT OF PUBLIC WORKS AND HIGHWAYS
AND
STATE OF MAINE DEPARTMENT OF TRANSPORTATION

BRIDGE NO. 247/084 (MEMORIAL BRIDGE)
ROUTE US 1 OVER THE PISCATAQUA RIVER

UPPER CHORD REPAIRS
SPANS 1, 2 AND 3

HARDESTY & HANOVER CONSULTING ENGINEERS NEW YORK, N.Y.	SCALE: AS NOTED DR. V.V. APPR. C.J.R. DATE: MAY 4, 1981	NEW HAMPSHIRE PROJECT P-3392 SHEET 19 OF 38

FILE NUMBER	FEDERAL PROJECT	SHEET NO.	TOTAL SHEETS
~~4-14-410~~	BHF-001-1(58)	19	38

Des. CJR
Drw. VV
Chk. E.J.F.

Proj. Engr. Eugene S. Tulich

1-18-1-3

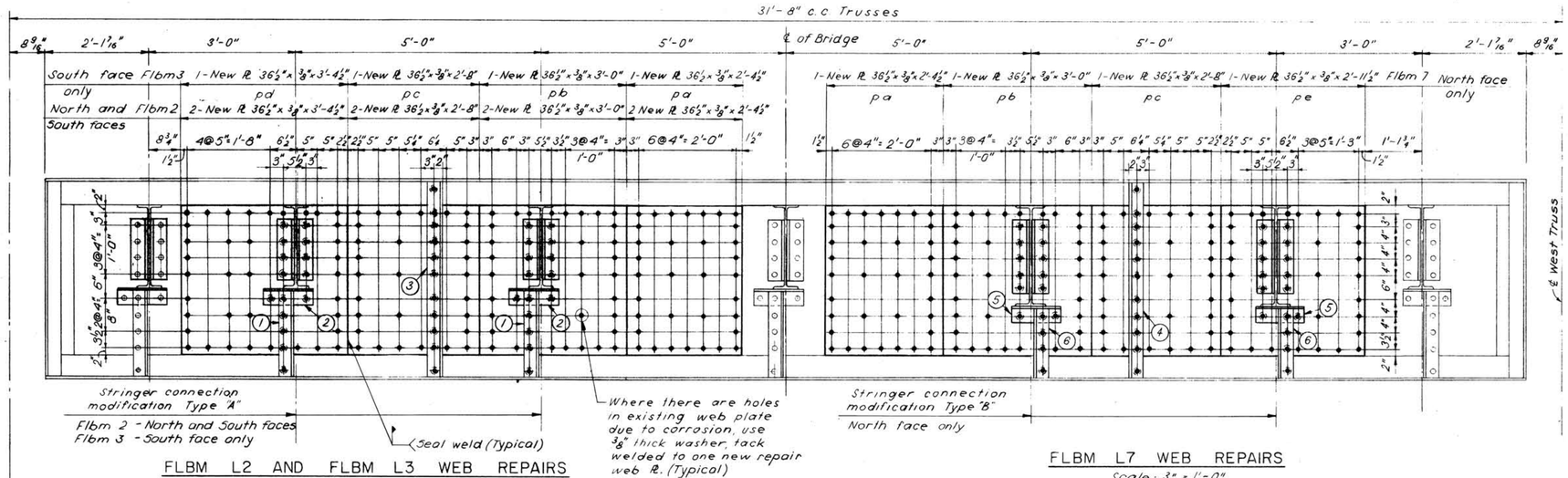

FLBM L2 AND FLBM L3 WEB REPAIRS

Scale: ¾" = 1'-0"
(Looking South)

FLBM L7 WEB REPAIRS

Scale: ¾" = 1'-0"
(Looking South)

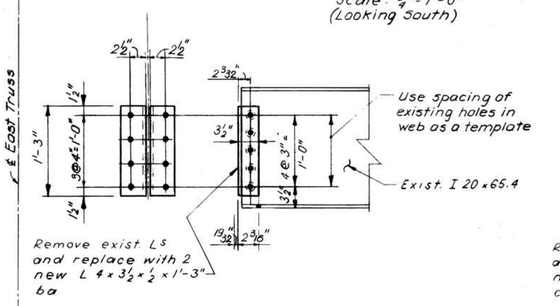

STRINGER CONNECTION MODIFICATION TYPE "A"

Scale: 1½"=1'-0"

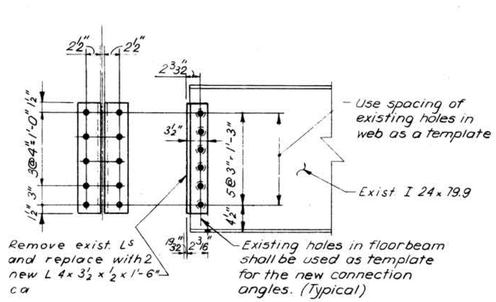

STRINGER CONNECTION MODIFICATION TYPE "B"

Scale: 1"=1'-0"

NOTES:

1. Remove stiffener L's and fills.
   Flbm 2-New fills both sides 4-fb, 4-fc. Reuse stiffener L's.
   Flbm 3-New fills, far side only. 2-fb, 2-fc. Reuse stiffener L's and near side fills.
2. Remove seat L's.
   Flbm 2-Replace both sides 4-aa
   Flbm 3-Replace far side only 2-aa. Reuse near side L's.
   See Detail A.
3. Remove stiffener L's.
   Flbm 2-Replace both sides 2-sa, 2-fa
   Flbm 3-Replace far side only 1-sa, 1 fa. Reuse near side L's
4. Remove stiffener L's.
   Replace near side only 1-sa, 1-fa. Reuse far side L.
5. Remove seat L's.
   Replace near side only 2-aa. Reuse far side L's. See Detail A.
6. Remove stiffener L's and fills.
   New fills, near side, 2-fd, 2 fe. Reuse stiffener L's and far side fills.

- K.O. existing ⅞" ϕ rivet and replace with ⅞" H.S. Bolt. Drill holes in new material as noted below. (Item 550.42).
- Drill 11/16" ϕ holes and ream to 15/16" ϕ for ⅞" H.S. Bolts.

All new material to be AASHTO M183 (ASTM A 36).

FLOORBEAMS L2, L3, AND L7 NEW MATERIAL		
4	Repair PL 36½" x ⅜" x 2'-4½"	pa
4	" " 36½" x ⅜" x 3'-0"	pb
4	" " 36½" x ⅜" x 2'-8"	pc
3	" " 36½" x ⅜" x 3'-4½"	pd
1	" " 36½" x ⅜" x 2'-11½"	pe
100	Washers 2½" ϕ x ⅜", 15/16" ϕ hole	
4	Stiffener L 3½" x 3" x ⅜" x 3'-11¼"	sa
4	Fill PL 3½" x ¼" x 3'-0½"	fa
6	" " 3½" x ⅜" x 1'-5⅜"	fb
6	" " 3½" x ¼" x 1'-0"	fc
2	" " 3½ x ⅜" x 1'-1⅜"	fd
2	" " 3½ x ¼" x 0'-8"	fe
8	Seat L 4" x 4" x ⅝" x 0'-11½"	aa
8	Connector L 4" x 3½" x 1'-3"	ba
4	" L 4" x 3½" x 1'-6"	ca

Total weight = 3270

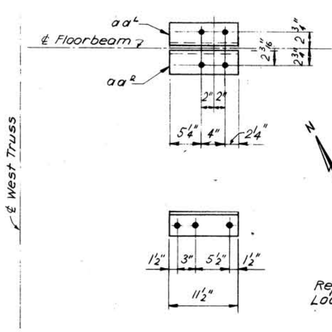

DETAIL A

Scale: 1"=1'-0"

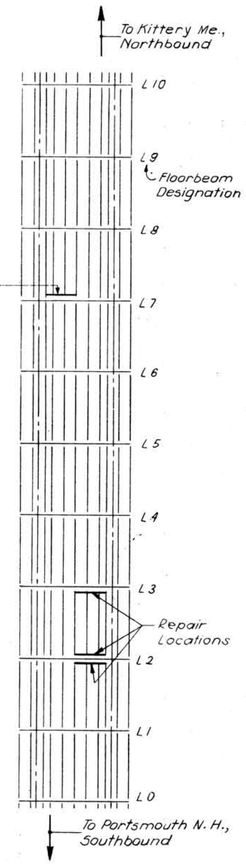

LIFT SPAN

FLOORSYSTEM

Scale: 1" = 30'-0"

NOTE:

All work on this Sheet to be paid for under Item 550.42, Structural Steel (Rehab. Floorbeams), except as otherwise noted for floorbeam rivet replacement.

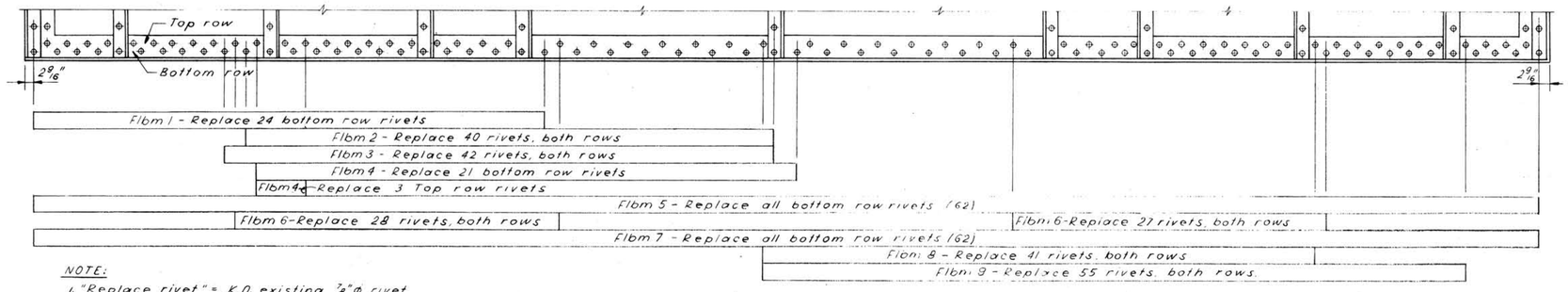

NOTE:

1. "Replace rivet" = K.O. existing ⅞" ϕ rivet and replace with ⅞" ϕ H.S. Bolt.
2. The Engineer shall mark all rivets for replacement.

LIFT SPAN FLOORBEAMS - RIVET REPLACEMENTS

NORTH ELEVATION

Scale: ¾" = 1'-0"

NOTE:

Lift span floorbeam rivet replacements to be paid for under Item 550.43, Structural Steel (Replace Rivets).

NEW HAMPSHIRE DEPARTMENT OF PUBLIC WORKS AND HIGHWAYS
AND
STATE OF MAINE DEPARTMENT OF TRANSPORTATION

BRIDGE NO. 247/084 (MEMORIAL BRIDGE)
ROUTE US 1 OVER THE PISCATAQUA RIVER

LIFT SPAN FLOORBEAM REPAIRS

HARDESTY & HANOVER CONSULTING ENGINEERS NEW YORK, N.Y.	SCALE: AS NOTED DR. V.V. APPR. C.V.E. DATE: MAY 4, 1981	NEW HAMPSHIRE PROJECT P-3392 SHEET 20 OF 38

FILE NUMBER	FEDERAL PROJECT	SHEET NO.	TOTAL SHEETS
~~4-14-4-10~~	BHF-001-1(58)	20	38

Des. CJR
Drw. VV
Chk. EET

Proj. Engr. Eugene S. Tulish

1-18-1-3

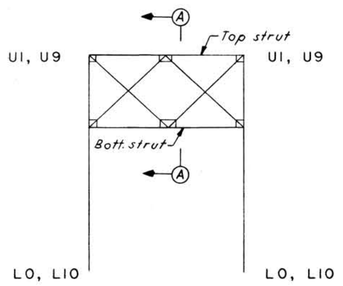

TYPICAL PORTAL

SPANS 1,2 AND 3

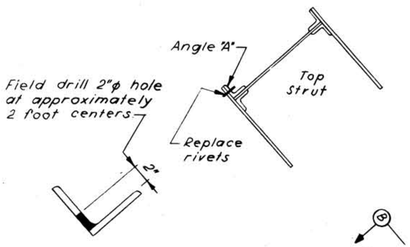

ANGLE "A"

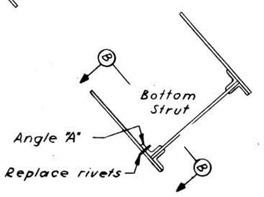

SECTION A - A

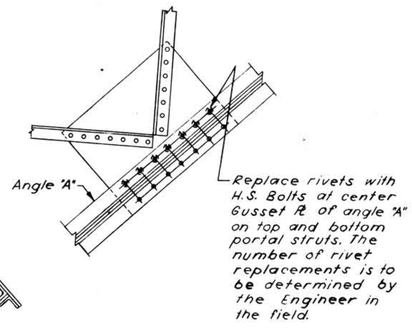

SECTION B - B

PORTAL STRUT REPAIRS

No scale.

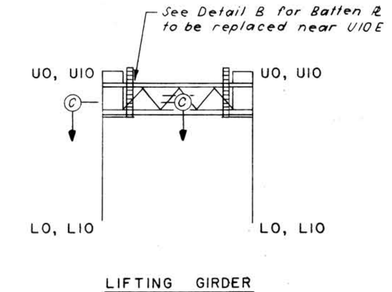

LIFTING GIRDER

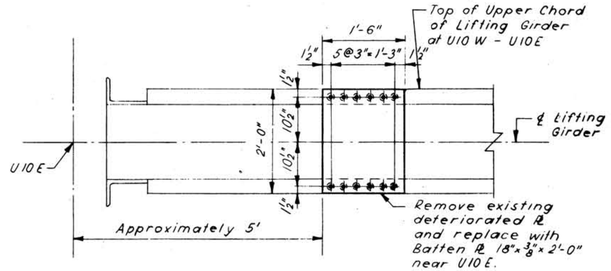

DETAIL "B"

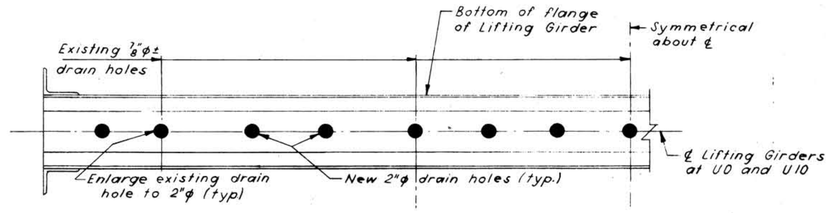

SECTION C - C

SPAN 2 - LIFTING GIRDER REPAIRS

No scale.

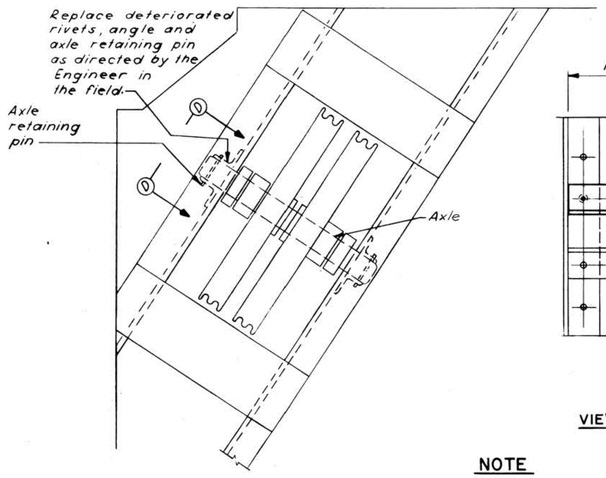

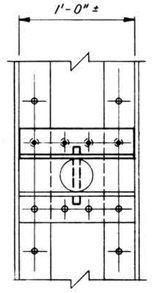

VIEW D-D

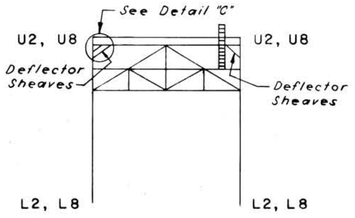

SPAN 2 - DEFLECTOR SHEAVES,

4 LOCATIONS AT U2 AND U8

DETAIL "C"

NOTE

All work to be paid for under Item 550.43, Structural Steel (Replace Rivets) or Item 550.44, Structural Steel (Rehab. Deteriorated Steel).

SPAN 2 - REPAIR TO DEFLECTOR SHEAVES MOUNTS

No scale.

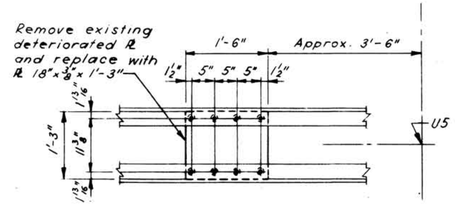

DETAIL "E"

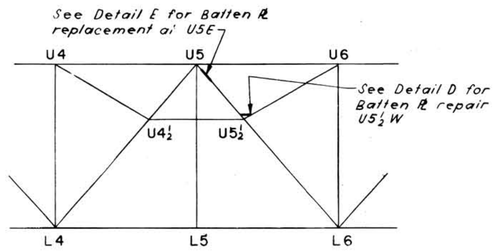

SPAN 2 - REPAIR LOCATIONS

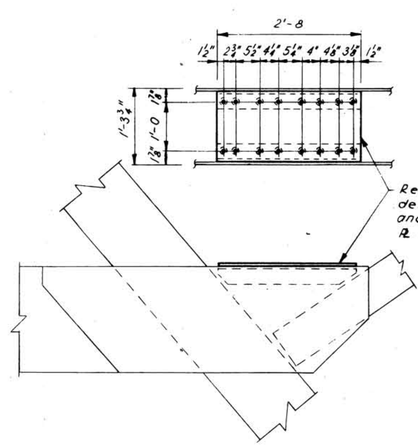

DETAIL "D"

SPAN 2 - REPAIRS NEAR CENTER OF LIFT SPAN

No scale.

Des. CJR
Drw. V.V
Chk. E.F.T

Proj. Engr. Eugene F. Tulik

1-18-1-3

NEW HAMPSHIRE DEPARTMENT OF PUBLIC WORKS AND HIGHWAYS AND STATE OF MAINE DEPARTMENT OF TRANSPORTATION		
BRIDGE NO. 247/084 (MEMORIAL BRIDGE) ROUTE US 1 OVER THE PISCATAQUA RIVER		
DETERIORATED STEEL REPAIRS		
HARDESTY & HANOVER CONSULTING ENGINEERS NEW YORK, N.Y.	SCALE: NO SCALE DR. V.V APPR. C.J.R. DATE: MAY 4, 1981	NEW HAMPSHIRE PROJECT P-3392 SHEET 21 OF 38

FILE NUMBER	FEDERAL PROJECT	SHEET NO.	TOTAL SHEETS
4-14-4-16	BHF-001-1(58)	21	38

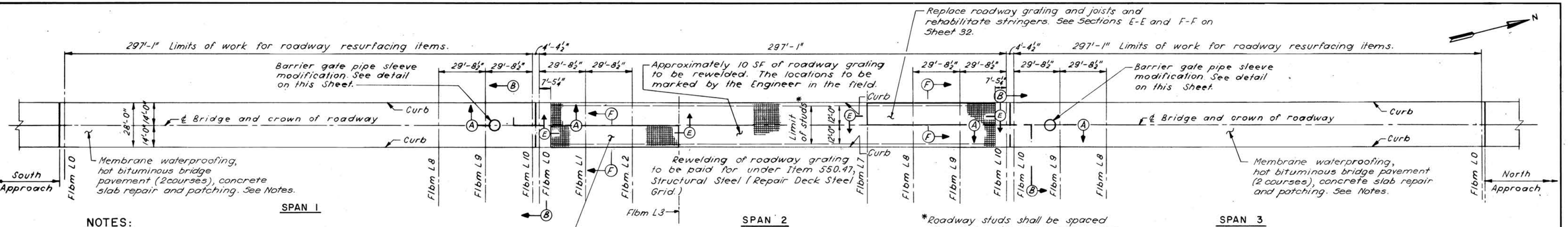

NOTES:

The bottom course of the bituminous bridge pavement to be paid for under Item 403.911, Hot Bituminous Bridge Pavement, 1" Base Course with Polyester Fibers. Vary depth as required to ascertain a 1-inch top wearing course.

The top course of the bituminous bridge pavement to be paid for under Item 403.912, Hot Bituminous Bridge Pavement, 1" Wearing Course.

The removal of the existing bituminous pavement to be paid under Item 511.001, Concrete Bridge Deck Pavement Removal. See continuation of Note below.

ROADWAY GENERAL PLAN
Scale: 1"=30'

*Roadway studs shall be spaced alternately with the existing worn studs, no less than 6 per square foot of grating surface. Roadway studs will be paid for under Item 550.48, Structural Steel (Steel Grid Skid Studs). See Sheet 32 for studs on new roadway grating section.

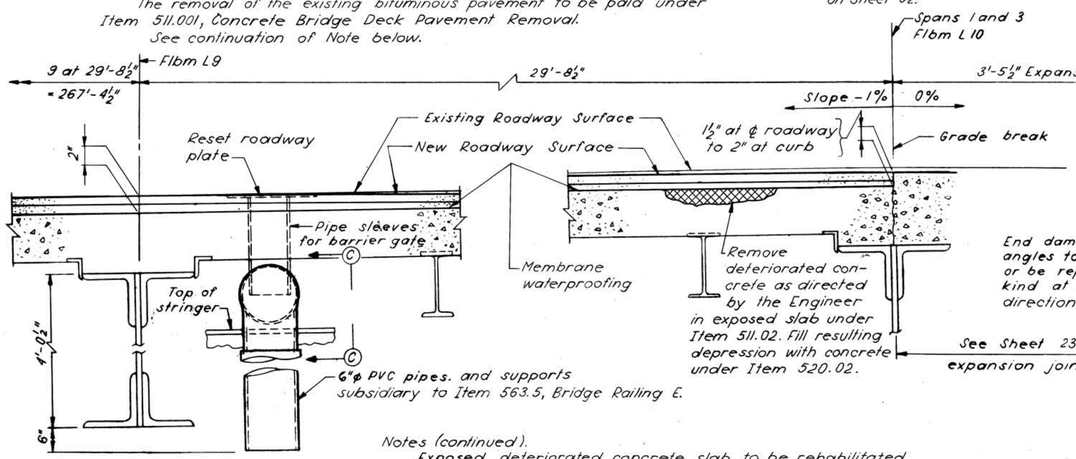

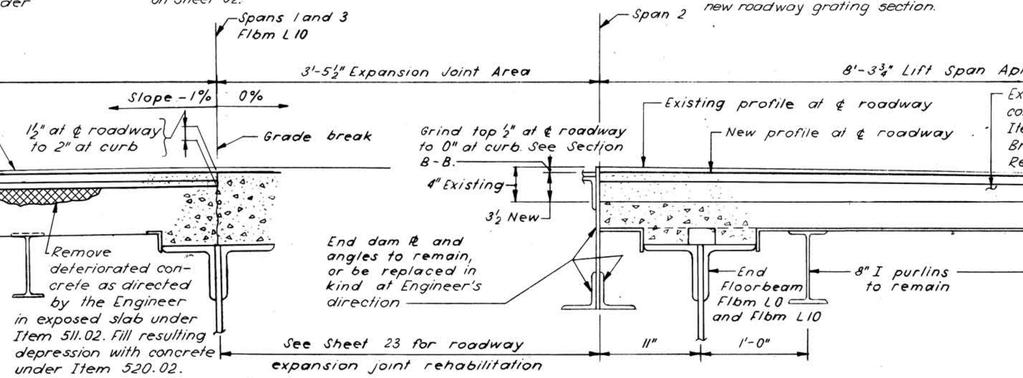

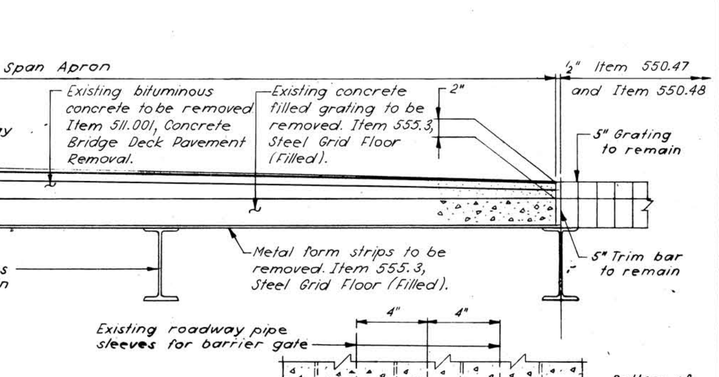

Note: For new apron materials and construction see Section B-B

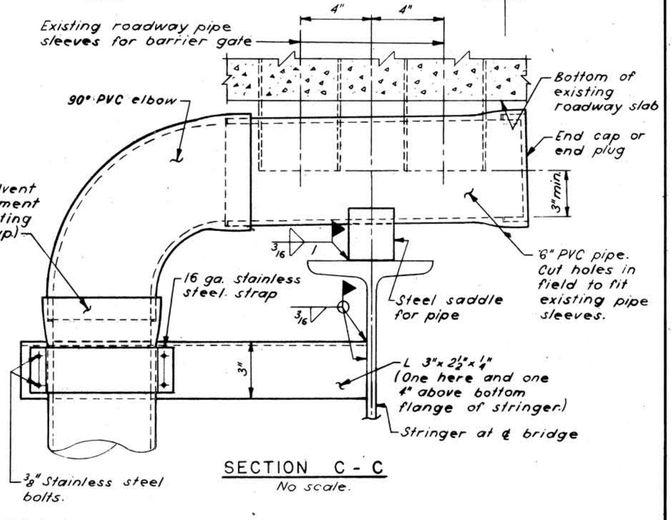

SECTION C - C
No scale.

Notes (continued).

Exposed deteriorated concrete slab to be rehabilitated shall be paid for under Item 511.02, Preparation for Partial Depth Concrete Bridge Deck Repairs.

Concrete deck repair to be paid for under Item 520.02 Concrete Class P for Patching.

Membrane Waterproofing to be paid for under Item 538, Barrier Membrane.

Clean and paint inside of tower span scuppers with Bitumastic #50. This work is subsidiary to deck rehabilitation.

SECTION A - A
Scale: 1½" = 1'-0"

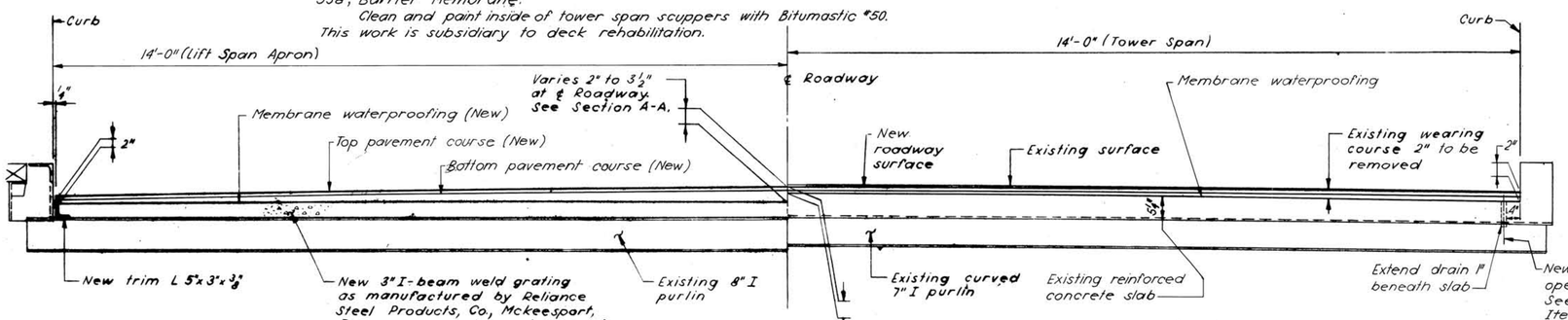

SECTION B - B
Scale: ¾" = 1'-0"

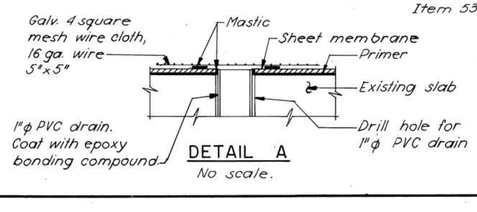

DETAIL A
No scale.

Proj.Engr. Eugene A. Tudisk

Des. CJR
Drw. V.V.
Chk. E.S.T.

1-18-1-3

FILE NUMBER	FEDERAL PROJECT	SHEET NO.	TOTAL SHEETS
4-14-4-10	BHF-001-1(58)	22	38

NEW HAMPSHIRE DEPARTMENT OF PUBLIC WORKS AND HIGHWAYS
AND
STATE OF MAINE DEPARTMENT OF TRANSPORTATION

BRIDGE NO. 247/084 (MEMORIAL BRIDGE)
ROUTE US 1 OVER THE PISCATAQUA RIVER

ROADWAY REPAIRS

HARDESTY & HANOVER
CONSULTING ENGINEERS
NEW YORK, N.Y.

SCALE: AS NOTED
DR. V.V. APPR. C.J.R.
DATE: MAY 4, 1981

NEW HAMPSHIRE PROJECT P-3392
SHEET 22 OF 38

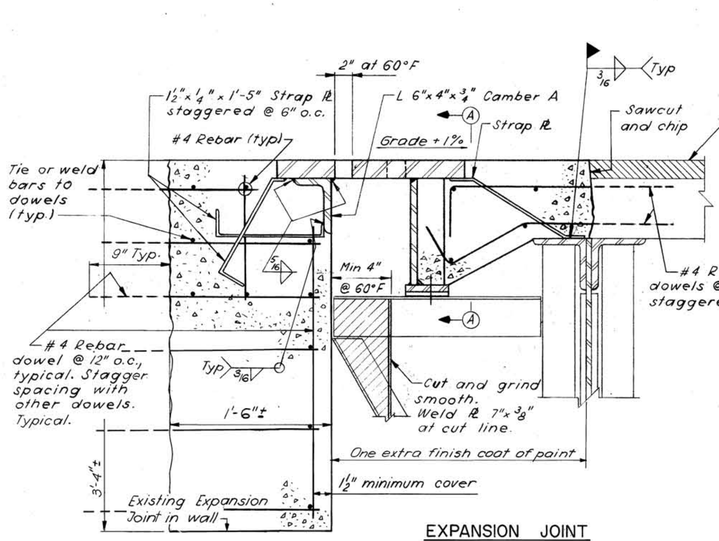

EXPANSION JOINT

SOUTH APPROACH - SPAN 1

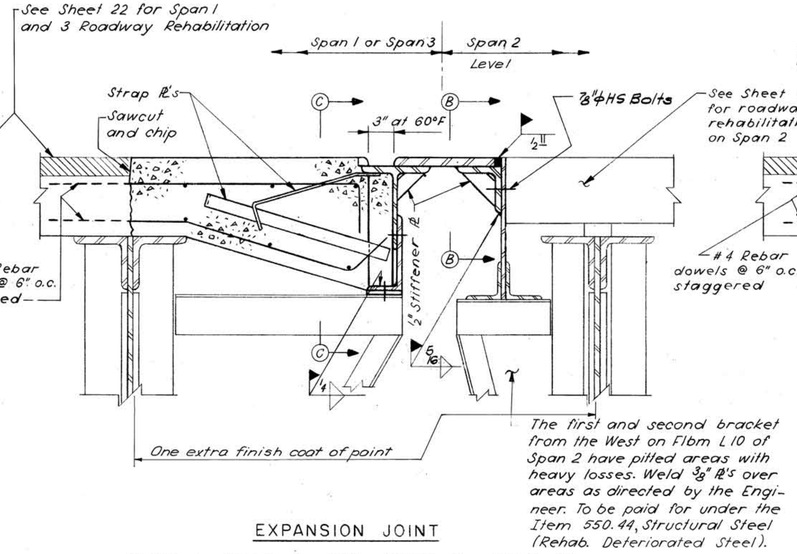

The first and second bracket from the West on Fibm L 10 of Span 2 have pitted areas with heavy losses. Weld ⅜" ℄'s over areas as directed by the Engineer. To be paid for under the Item 550.44, Structural Steel (Rehab. Deteriorated Steel).

EXPANSION JOINT

SPAN 1 - SPAN 2 AND SPAN 3 - SPAN 2

Scale: 1½" = 1'-0"

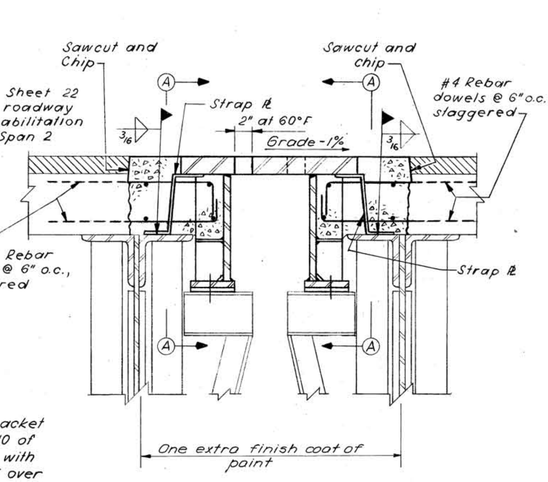

EXPANSION JOINT

SPAN 3 - NORTH APPROACH

Scale: 1½" = 1'-0"

NOTES:

1. Remove existing concrete, bituminous overlay, end dam, and structural steel in areas shown. Concrete shall by removed by making a 2"± deep sawcut and chipping. Do not destroy existing reinforcement bars.
2. #4 rebar dowels shall be grouted into 1"ϕ x 9" holes drilled in the existing concrete where shown. The minimum concrete cover above or below dowels shall be 1½".
3. Existing exposed reinforcing steel shall be welded to new end dam strap ℄'s and stiffener ℄'s.
4. Transverse reinforcement shall be #4 rebars tied or welded to #4 rebar dowels.
5. Concrete removal to be paid for under Item 512.01, Preparation for Concrete Repairs.
6. Reinforcing bars, and dowels to be paid for under Item 544, Reinforcing Steel.
7. Concrete to be paid for under Item 520.12, Concrete Class A.
8. Expansion joint finger plates, anchors and supporting steel to be paid for under Item 550.50, Structural Steel (Expansion Joints).

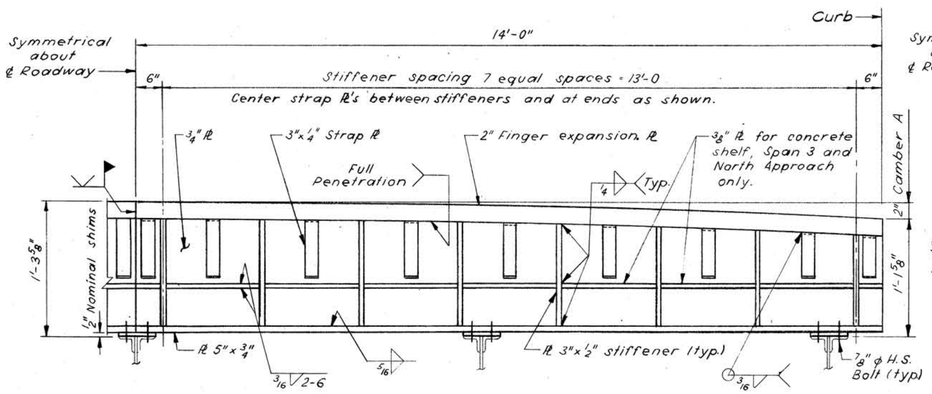

END DAM SECTION A - A

Scale: 1½" = 1'-0" Vert.; ¾" = 1'-0" Horiz.

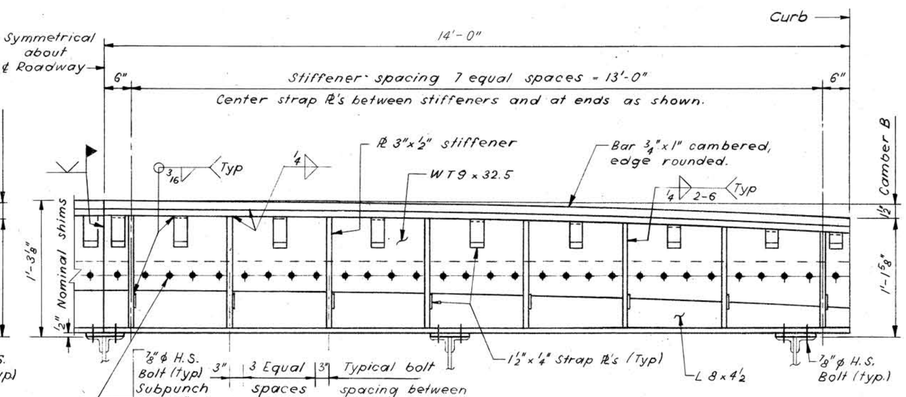

END DAM SECTION C - C

Scale: 1½" = 1'-0" Vert.; ¾" = 1'-0" Horiz.

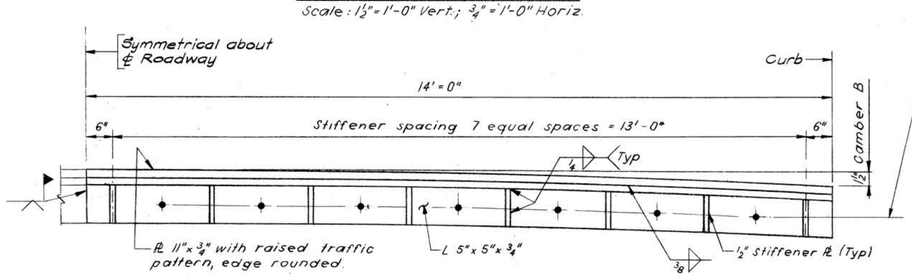

END DAM SECTION B - B

Scale: 1½" = 1'-0" Vert.; ¾" = 1'-0" Horiz.

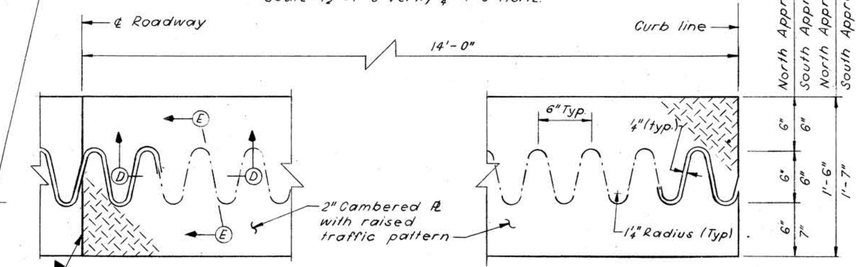

EXPANSION FINGERS PLATE

Scale: 1½" = 1'-0"

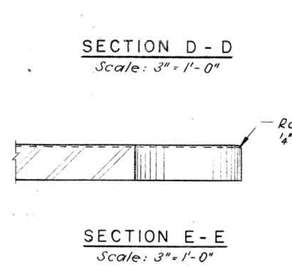

SECTION D - D

Scale: 3" = 1'-0"

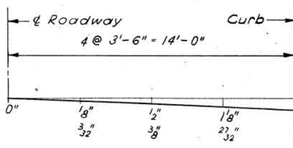

SECTION E - E

Scale: 3" = 1'-0"

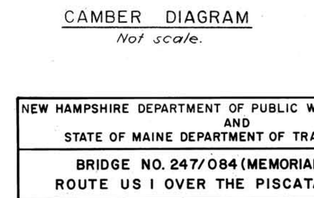

CAMBER DIAGRAM

Not scale.

NEW HAMPSHIRE DEPARTMENT OF PUBLIC WORKS AND HIGHWAYS
AND
STATE OF MAINE DEPARTMENT OF TRANSPORTATION

BRIDGE NO. 247/084 (MEMORIAL BRIDGE)
ROUTE US 1 OVER THE PISCATAQUA RIVER

ROADWAY EXPANSION JOINTS

HARDESTY & HANOVER CONSULTING ENGINEERS NEW YORK, N.Y.	SCALE: AS NOTED DR. V.V. APPR. C.J.R. DATE: MAY 4, 1981	NEW HAMPSHIRE PROJECT P-3392 SHEET 23 OF 38

Des. C.J.R.
Drw. V.V.
Chk. E.S.T.

Proj. Engr. Eugene S. Tulich

1-18-1-3

FILE NUMBER	FEDERAL PROJECT	SHEET NO.	TOTAL SHEETS
4-14-4-10	BHF-001-1(58)	23	38