(No Model.)

5 Sheets—Sheet 1.

W. SCHERZER, Dec'd.

A. H. SCHERZER, Administrator.

LIFT BRIDGE.

No. 511,713. Patented Dec. 26, 1893.

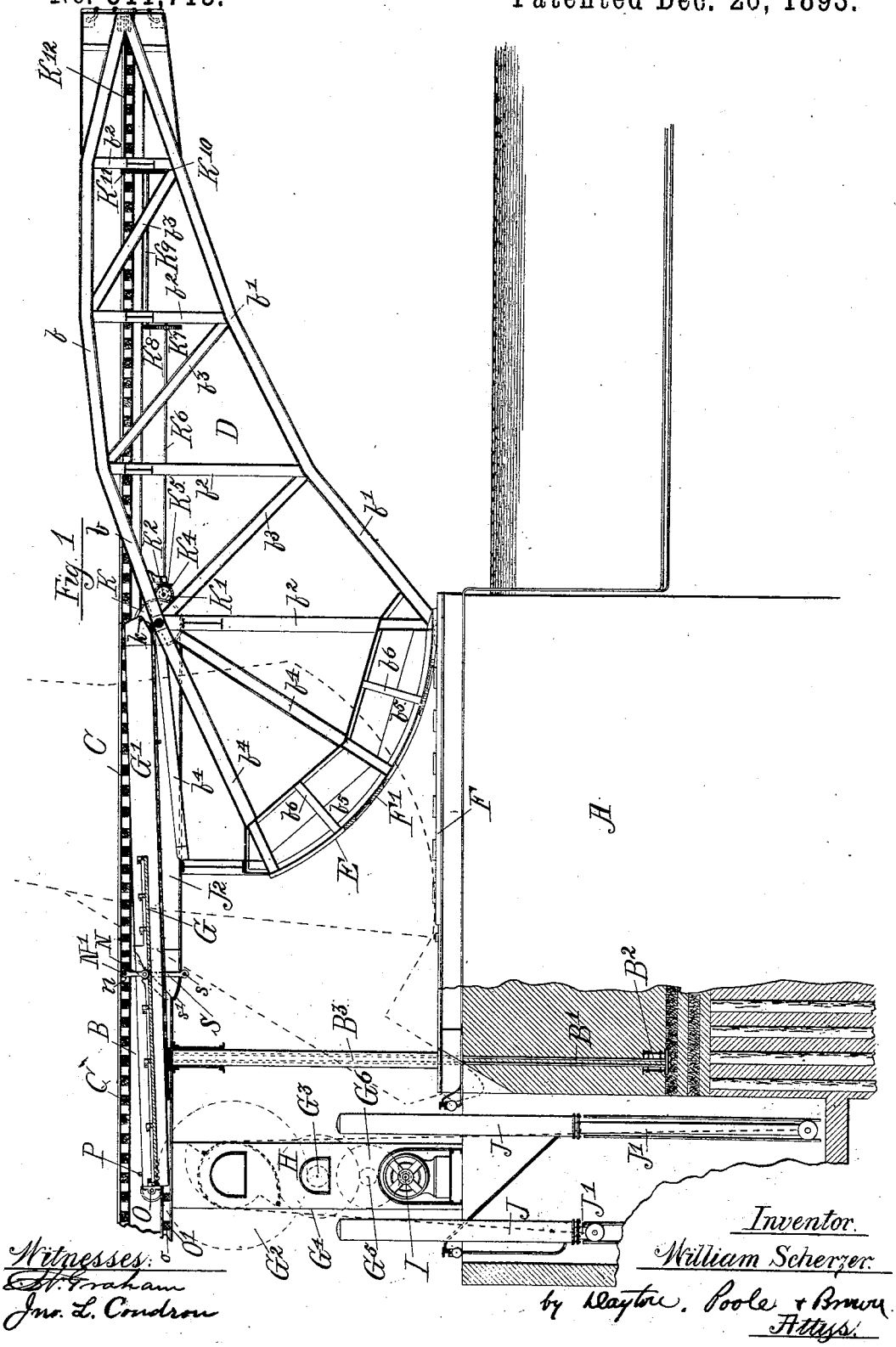

THE NATIONAL LITHOGRAPHING COMPANY,
WASHINGTON, D. C.

(No Model.) 5 Sheets—Sheet 2.

W. SCHERZER, Dec'd.

A. H. SCHERZER, Administrator.

LIFT BRIDGE.

No. 511,713. Patented Dec. 26, 1893.

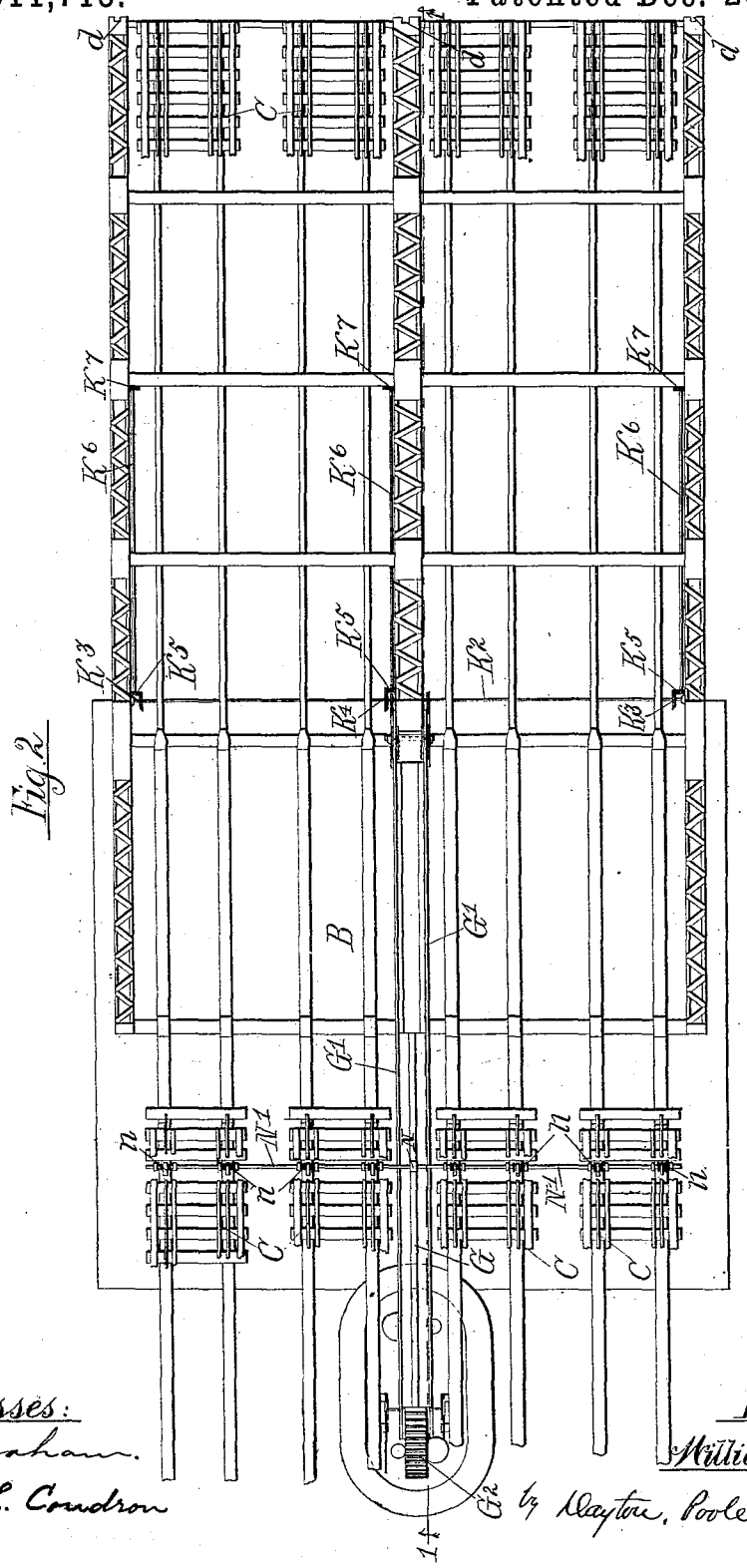

Witnesses:
H. Graham.
Jno. L. Condron

Inventor.
William Scherzer.
by Dayton, Poole & Brown.
Attys.

THE NATIONAL LITHOGRAPHING COMPANY,
WASHINGTON, D. C.

(No Model.)

5 Sheets—Sheet 3.

W. SCHERZER, Dec'd.

A. H. SCHERZER, Administrator.

LIFT BRIDGE.

No. 511,713. Patented Dec. 26, 1893.

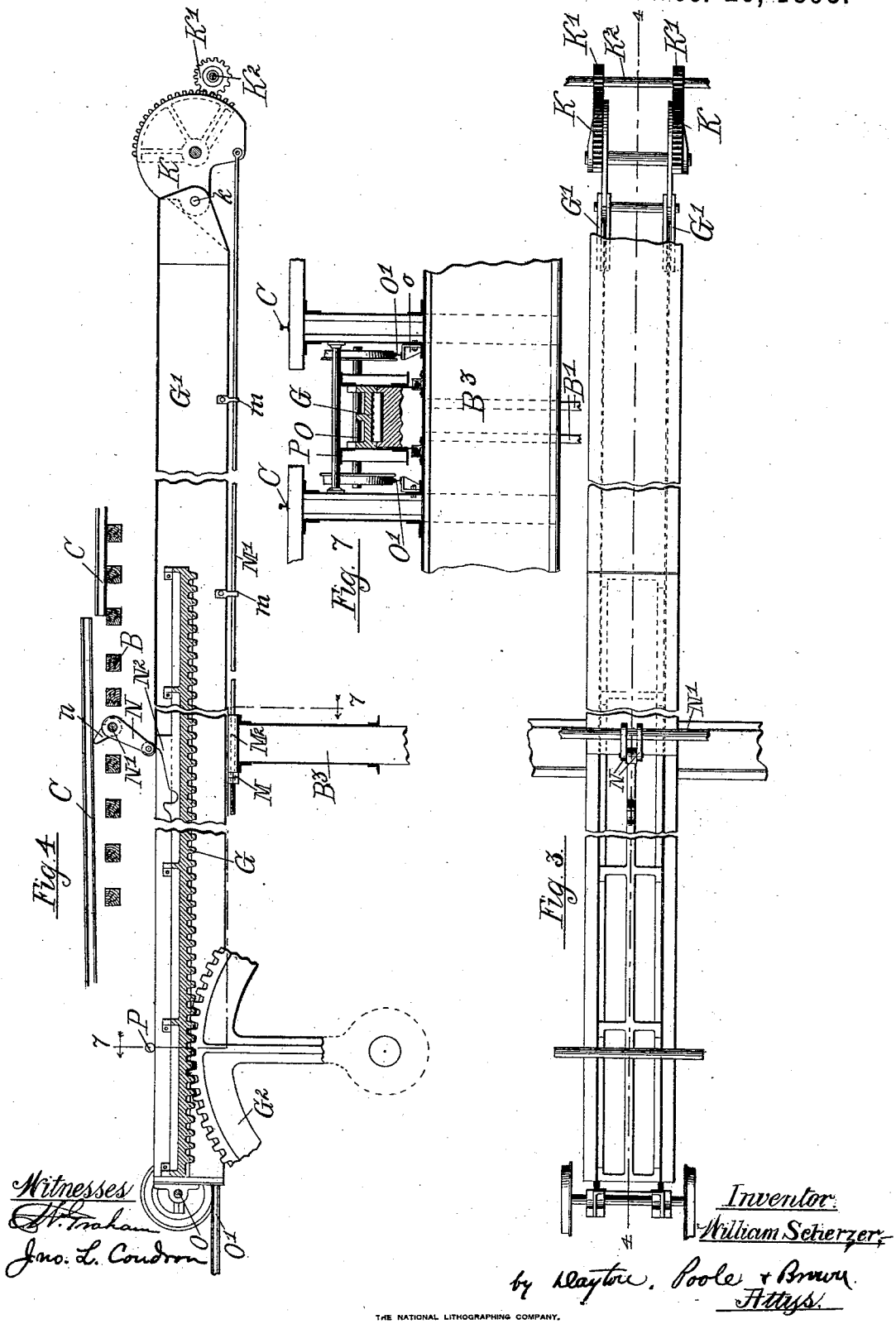

Witnesses
H. Graham
Jno. L. Coudron

Inventor:
William Scherzer,
by Dayton, Poole & Brown
Attys.

THE NATIONAL LITHOGRAPHING COMPANY,
WASHINGTON, D. C.

(No Model.) 5 Sheets—Sheet 4.

W. SCHERZER, Dec'd.

A. H. SCHERZER, Administrator.

LIFT BRIDGE.

No. 511,713. Patented Dec. 26, 1893.

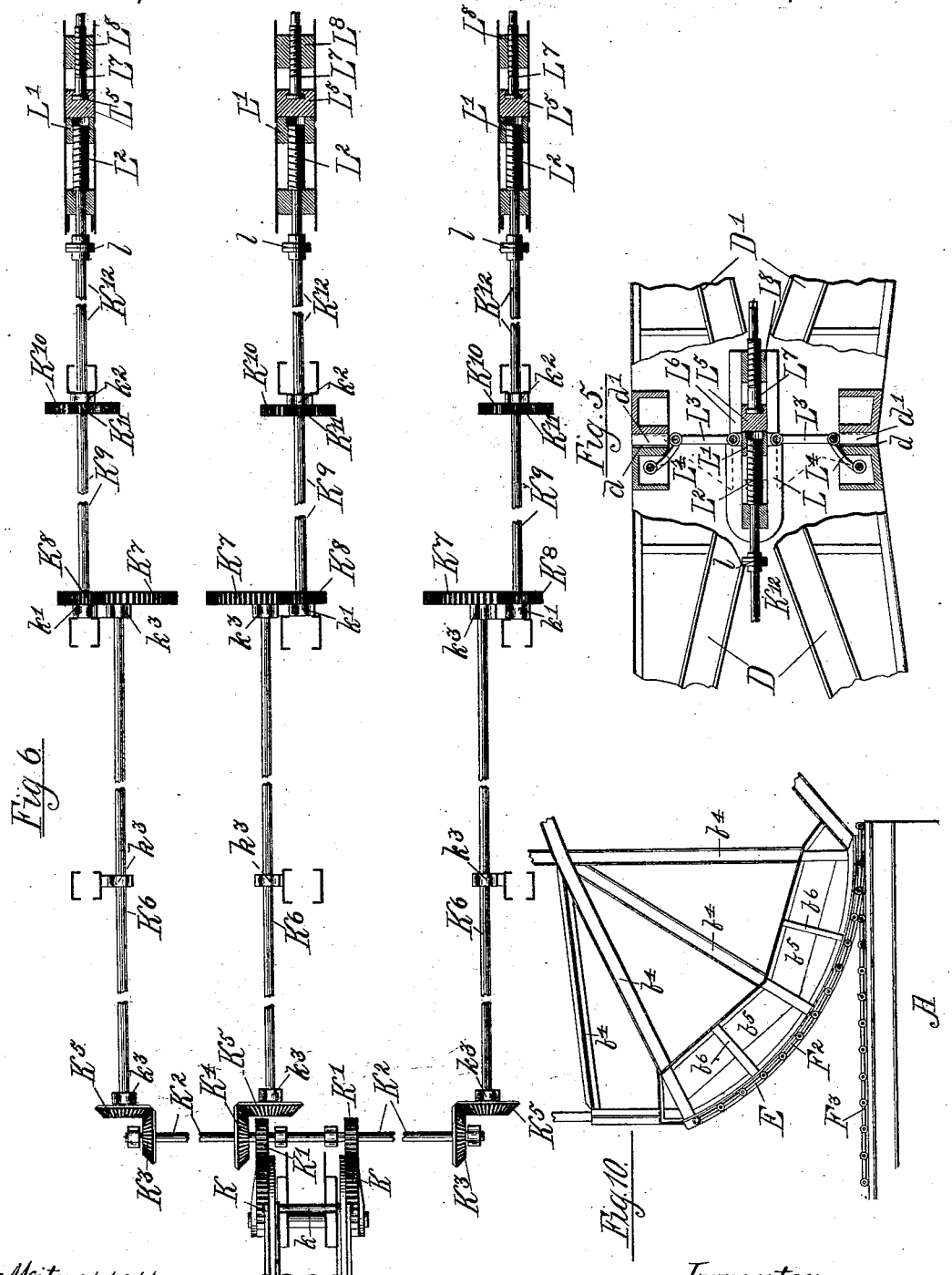

Witnesses:
H. Graham.
Jno. L. Coudron

Inventor:
William Scherzer.
by Clayton, Poole & Brown.
Attys.

THE NATIONAL LITHOGRAPHING COMPANY.
WASHINGTON, D. C.

(No Model.)

5 Sheets—Sheet 5.

W. SCHERZER, Dec'd.

A. H. SCHERZER, Administrator.

LIFT BRIDGE.

No. 511,713. Patented Dec. 26, 1893.

Fig. 8.

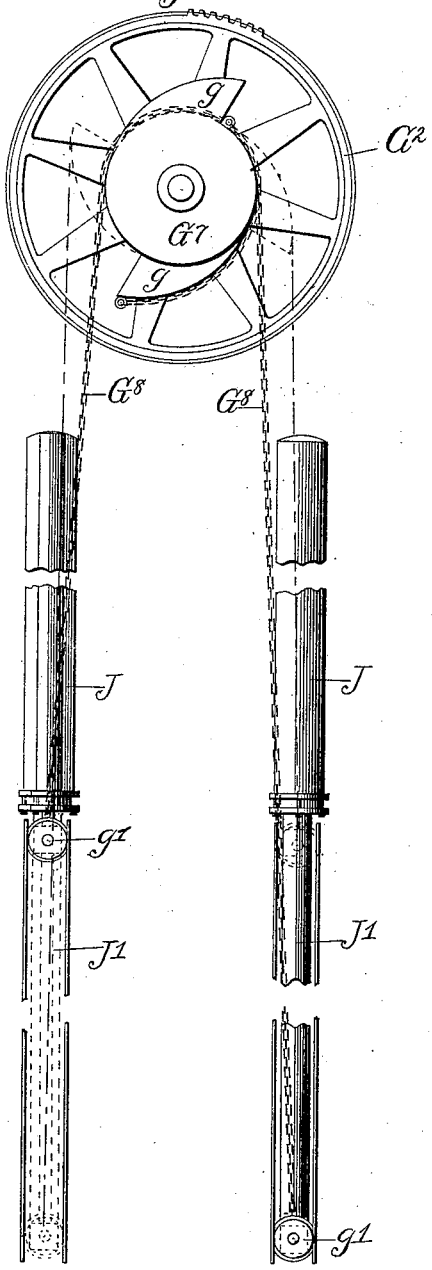

Fig. 9.

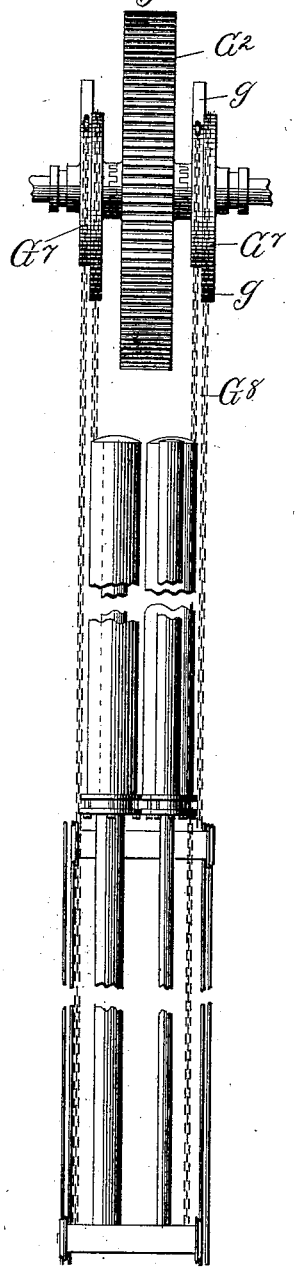

Witnesses:
H. Graham.
Jno. L. Condron

Inventor
William Scherzer.
by Dayton, Poole & Brown.
Attys.

THE NATIONAL LITHOGRAPHING COMPANY,
WASHINGTON, D. C.

UNITED STATES PATENT OFFICE.

WILLIAM SCHERZER, OF CHICAGO, ILLINOIS; ALBERT H. SCHERZER ADMINISTRATOR OF SAID WILLIAM SCHERZER, DECEASED.

LIFT-BRIDGE.

SPECIFICATION forming part of Letters Patent No. 511,713, dated December 26, 1893.

Application filed May 29, 1893. Serial No. 475,905. (No model.)

To all whom it may concern:

Be it known that I, WILLIAM SCHERZER, of Chicago, in the county of Cook and State of Illinois, have invented certain new and useful Improvements in Lift-Bridges; and I do hereby declare that the following is a full, clear, and exact description thereof, reference being had to the accompanying drawings, and to the letters of reference marked thereon, which form a part of this specification.

My invention relates to that class of lift-bridges or drawbridges known as bascule-bridges, in which the bridge is opened and closed by vertical circular movements of the spans or span.

Among the primary objects of my invention are, to produce a lift-bridge in which no supporting pivots shall be used and in which, consequently, the structural weaknesses and other defects incident to the use of supporting pivots shall be avoided; and to produce a bascule-bridge in which the centers of gravity of the movable spans shall be so disposed that, if the spans be free from all restraint, they will automatically assume a partially open position; the actuating mechanism being thus aided in starting both the opening and closing movements of the bridge-spans.

Other objects of my invention are to provide means for readily and securely locking the spans in closed position, and to provide compact and efficient connections for actuating the spans.

My invention consists in the novel features of construction and arrangement as hereinafter described and claimed.

The more precise nature of my invention will be better understood when described with reference to the accompanying drawings, in which—

Figure 1 is a view, principally in side elevation, of a bascule-bridge embodying my invention, certain parts being shown in vertical longitudinal section on the line 1—1 of Fig. 2. Fig. 2, is a plan view of the bridge. Fig. 3, is a plan view of the inner part of one of the bridge-spans; the flooring being partially removed to expose certain structural parts. Fig. 4, is a vertical longitudinal section of part of the bridge, taken on the line 4—4 of Fig. 3. Fig. 5, is an enlarged vertical longitudinal section of the outer or meeting ends of two bridge-spans, showing certain parts of the locking-mechanism. Fig. 6, is a detached plan view of the locking-mechanism. Fig. 7, is a transverse vertical section of one of the bridge-spans, taken on the indirect line 7—7 of Fig. 4. Fig. 8, is a detached view, in side elevation, of an actuating-mechanism for raising and lowering the bridge-span. Fig. 9, is also a side elevation of the actuating-mechanism, taken at right angles from the point of view of Fig. 8. Fig. 10 is a side elevation of the inner end of the bridge-spans, showing a modified form of connection for preventing slipping of the span upon the pier.

Previous to my present invention, the movable spans of bascule-bridges have been mounted upon horizontal pivot-pins and the centers of gravity of such spans have been so placed that when freed from all restraint the spans would remain in whatever position they may have occupied when released, either open or closed or partly open. The use of supporting pivots is very objectionable, owing to the liability of injury to the pins or their bearings by the constantly varying loads and strains brought upon the parts. Moreover, the equal balancing of the movable spans of these bridges is also seriously objectionable inasmuch as it requires development of great power in the actuating mechanism and also occasions great strain upon such mechanism in starting the movements of the spans for opening and closing the bridge. As will be seen from the ensuing description, I have produced a bascule-bridge in which supporting pivots for the movable spans are wholly dispensed with; the spans rocking at their inner ends directly upon the bridge-piers. It will also be seen that I have so disposed the centers of gravity of the movable spans that when the spans are released from restraint they will, if open, partly close, and will partly open if closed; thus relieving the actuating mechanism of the severe labor and strains incident to starting the opening and closing movements of the spans.

In the principal figures of the drawings, I have shown a bascule-bridge, embodying my

invention, having but a single movable span, but it is to be understood that the bridge may either have one or two spans as desired; the outer end of a single span bridge meeting the opposite abutment, and the outer ends of the double spans meeting each other, as is shown, for example, in Fig. 5.

In the said drawings, A designates the shore-pier of the bridge, this pier being built up of masonry or in any other suitable manner to afford a stable support for the movable span of the bridge. Above this pier A is built the approach B to the movable span; this approach being shown as consisting of a horizontal roadway upon which (in the case of a railway-bridge) any desired number of track-rails C are laid. Obviously in the case of a foot and carriage way bridge, the rails C will not be present. The approach B is shown as anchored securely to the pier or abutment A by anchor-rods B′ the lower ends of which are secured to anchor-plates or "crabs" B^2 and which extend upward through columns or pillars B^3 upon the pier A; the approach rests upon these columns or pillars and the upper ends of the anchor-rods B′ are bolted or otherwise strongly secured to the approach.

It will be obvious from the ensuing description, that the precise construction of the approaches may be varied to accord with the special requirements of each particular bridge, and that the approach structures do not form an exclusively essential part of my present invention.

D designates, as a whole, the movable span of the bridge which span rests at its inner or shore end directly upon the pier A and normally projects outward to or toward the opposite bank of the waterway or ravine. This span is shown as built of metal beams, although it may, of course, be of wood or of both wood and metal if desired. The inner or shore end of the span preponderates in weight over the outer end of the span, and the said inner or shore end is of curved or sector-shape so as to enable the span to rock vertically upon the pier A. Moreover, the preponderance of weight of the shore end of the span over its outer portions is such that, if freed from restraint, the span will stand at a lateral inclination about midway between the horizontal position shown in solid lines in Fig. 1 and the vertical position indicated in dotted lines in said figure. The framework of the span may, in other and minor particulars, be of any suitable structural character, but as shown it is formed of upper and lower longitudinal side-sections *b* *b′* converging toward the outer end of the span and connected together by vertical braces b^2 and oblique braces b^3; there being, of course, as many duplicate sets of such parts, between the sides of the span, as the width of the span may demand. The sector-shaped inner end E of the span is shown as secured to the outer ends of radial braces b^4, as well as to the inner vertical braces b^2, and said sector-shaped end is preferably backed and strengthened, as well as weighted, by heavy backing beams or timbers b^5 and braces b^6 approximately as shown. The intention is to open and close the bridge-span by rocking it inward and outward upon its sector-shaped end E, and provision is made for preventing this end of the span from slipping inward or outward upon the pier A. Such means may be of various structural types and, for purpose of illustration, I have shown in Fig. 1, a rack and gear-tooth engagement and in Fig. 10 a chain connection between the sector-shaped end of the span and the pier. In Fig. 1 a horizontal rack-plate F is shown as secured upon the upper end of the pier, and the cross-bars or teeth of this rack-plate are shown as arranged to enter the spaces between the cross-bars or teeth of a gear-plate F′ which is secured to the outer side of the segmental end E of the span; the rack-plates thus preventing the end of the span from slipping either inwardly or outwardly upon the pier. In Fig. 10, two or any desired number of chains F^2, or cables, ropes, or similar flexible devices are shown; one end of each of said flexible devices being connected to the outer part of the top of the pier, and the opposite end of said flexible device being connected to the upper part of the segmental end E of the span, these flexible connections F^2 preventing the end of the span from slipping inward upon the pier. One, or any desired number of similar flexible connections F^3 are also provided, each of said connections being secured at one end to the inner part of the top of the pier and at its opposite end to the lower part of the inner end of the span, and thus preventing said span from slipping outward upon the pier. Thus in any event a constant relation is maintained between the pier and the end of the span resting thereon, and all slipping or displacement of the span is obviated.

Various means may be employed for rocking the span so as to open and close the bridge. I have shown a gear-train actuated either by an electric-motor or by hydraulic pistons, but suitable cable-winding gear or any other desirable actuating mechanism may be employed; it being borne in mind that, whatever the precise character of the actuating mechanism may be, it shall operate positively upon the span preferably in both directions, to lift and also to depress the span. So far as my invention contemplates the direct resting of the shore-span upon the pier, and the consequent avoidance of the use of supporting pivots for the span, it is immaterial whether the span be counterpoised so as to be inert in all positions, or prone to remain open, or closed, or partially open. But so far as the relation of the span to its actuating devices is concerned, it is desirable that the span be so constructed as to assume a partially open position, as above described, inasmuch as this enables the span to assist the

actuating-mechanism in starting to either open or close the bridge.

Referring more particularly to Figs. 1 and 4, I will describe the actuating-mechanism which I have shown. G designates a rack-bar which is located at the upper part of the inner end of the bridge-span, this rack-bar being carried by a pair of pivoted beams G′ to be hereinafter more fully described. The teeth of this rack-bar are formed upon the under side of the bar and preferably extend throughout the length of the bar, and are engaged by a gear-wheel G^2 which is journaled in the upper end of a vertical supporting-frame H resting upon the pier A. This gear-wheel G^2 forms the upper member of a vertical train of gears which are likewise journaled in the supporting-frame H. The teeth of the gear-wheel G^2 mesh with the teeth of a gear-pinion G^3 which is actuated by a gear-wheel G^4 upon the same shaft which carries the gear-pinion G^3. The gear-wheel G^4 meshes with a gear-pinion G^5 which is actuated by a gear-wheel G^6 upon the same shaft as that which carries the pinion G^5. The gear-wheel G^6 meshes with a gear-wheel mounted upon the armature shaft of a suitable electric-motor I. It will thus be seen that when the armature-shaft of the motor is caused to revolve in one direction, its motion is transmitted through the train of gearing G^6, G^5, G^4, and G^3 to the gear-wheel G^2, causing the latter to draw the rack-bar G to the left and thus raise the bridge-span. When the armature-shaft is rotated in the opposite direction, the gear-wheel G^2 is likewise oppositely revolved and moves the rack-bar to the right so as to lower the bridge-span. I have, as above stated, also shown a hydraulic piston or ram mechanism for raising and lowering the bridge-span. J designates the cylinders of the rams and J′ the pistons thereof. In this instance the gears G^3, G^4, G^5 and G^6 are dispensed with, and the gear-wheel G^2 carries a barrel G^7 having oppositely disposed radial extensions or offsets g. Chains G^8, or cables, ropes, or equivalent flexible connections are used to connect the lower ends of the pistons J′ with the barrel G^7; the lower ends of said flexible connections being secured to the cylinders J, and said flexible connections being attached to cross-heads g^2 g^2 carried by the lower ends of the pistons J′ which cross-heads are provided with guide-wheels g' g' running on suitable ways, as shown. The upper end of one of the flexible connections G^8 is connected to the outer end of one of the extensions g of the barrel G^7 while the upper end of the other connection G^8 is secured to the barrel at the point of juncture of the outer end of the opposite extension g therewith. The object of this arrangement is to provide a greater leverage at the time the bridge is open, so as to hold the spans firmly in their open position and prevent shifting or swaying thereof by wind pressure. The proper valves and pipe connections are provided for the cylinders J, and the arrangement is such that when the bridge-span is to be raised, water is let into the left hand cylinder J, depressing its piston J′, unwinding the corresponding chain from the barrel G^7 and extension g and revolving the gear-wheel G^2 to the left; the rack-bar G being also moved to the left, and the bridge-span being raised. When the bridge-span is to be lowered, the opposite piston J′ is depressed, unwinding the corresponding chain G^8 from the barrel G^7 and opposite extension g, turning the gear-wheel G^2 to the right so as to move the rack-bar G also to the right, and thus lowering the span. As before stated, the counterpoise of the span is such that when the span is fully raised it tends to rock downward, and when fully lowered it tends to rock upward, and thus in either event the span assists the starting of the hydraulic pistons, or the electric motor, or whatever other actuating-mechanism may be employed to open and close the bridge.

It is desirable that means shall be provided for arresting the downward movement of the span, and for maintaining it rigidly in its horizontal position without reliance upon the actuating devices. This is accomplished by one or more beams J^2 secured at one end to the upper part of the inner end of the span, and arranged to engage beneath the floor of the approach B when the span is in its proper lowered position. It is also desirable that the outer ends of the spans (when two spans are used) should be locked together so as to prevent vertical movement on the end of one span relatively to the other. For this purpose I have provided the attachments which I will now proceed to describe. As stated previously, the beams G′ which carry the rack-bar G are pivotally connected to the upper part of the inner end of the span D. To be more precise in this respect, however, the outer ends of the beams G′ are pivotally connected eccentrically, as at k, to two mutilated disks or wheels K which are journaled so as to oscillate in the upper part of the inner end of the bridge-span. Peripherally these disks or wheels are toothed and each meshes with one of the two gear pinions K′ which are carried by a horizontal revoluble shaft K^2, said shaft being journaled horizontally beneath the floor of the bridge-span. At each end, the shaft K^2 carries one of two beveled gear-wheels K^3 and also, intermediately of its ends, said shaft carries a third beveled gear-wheel K^4. These gear-wheels K^3 and K^4 mesh with beveled gear-wheels K^5 upon the rear ends of revoluble horizontal shafts K^6 which are journaled in suitable bearings as k^3 so as to extend longitudinally of the bridge-span. At their outer ends, the shafts K^6 carry each a gear-wheel K^7 which meshes with one of three gear-pinions K^8 carried at the inner end of one of three revoluble shafts K^9; these shafts being journaled in suitable bearings k', so as to extend longitudinally of the bridge-span beneath the floor of the same. At their outer ends the

shafts K^9 carry gear-wheels K^{10} which mesh with gear-pinions K^{11} carried at the inner ends of revoluble shafts K^{12}; said shafts being journaled, in suitable bearings k^2 beneath the floor of the bridge-span, so as to extend longitudinally of said span.

It will be seen by reference to Figs. 1 and 6, that the shafts K^9 are placed laterally out of alignment with the shafts K^6, and that the shafts K^{12} are placed above the plane of the shafts K^9; these arrangements being among the minor details of construction, and being therefore not absolutely essential, but serving to bring the locking devices, connected to the outer ends of the shafts K^{12}, into proper position relative to the outer end of the bridge-span.

Referring now more particularly to Figs. 2, 5 and 6, *d* designates three recesses which are formed in two sets, one above the other, in the outer end of the bridge-span D, said recesses being placed vertically in the end of the span and being open at top and bottom, and being also each designed to receive one of six projections *d'* carried either by the outer end of a similar opposing bridge-span or by the opposite approach or abutment. Within the outer end of the bridge-span D are placed three longitudinal guides L each of which is located midway between two of the adjacent upper and lower recesses *d* and in each of which works a nut L' into which is inserted a screw-threaded shaft L^2. Each of the three screw-threaded shafts L^2 is connected, by a suitable coupling *l*, or otherwise, to the corresponding shaft K^{12}. To the opposite, upper and lower sides of each nut L' are pivoted the adjacent ends of two toggle-arms L^3 the outer ends of which are located near to the inner open ends of the recesses *d*. To the outer ends of the toggle-arms L^3 are pivotally connected two links L^4 which are pivotally connected to the bridge-span at points just back of the recesses *d*. The arrangement is such that as the shafts K^{12} are rotated in one direction or the other, as will be presently explained, the nuts L' are moved outward or inward by the threaded shafts L^2; thus causing the outer ends of the toggle-arms L^3 to approach toward or to recede from the inner ends of the recesses *d*; said arms always moving oppositely from each other. When the toggle-arms L^3 are moved outward their outer ends come into direct contact with the inner ends of the shoulders or projections *d'* and thus prevent the ends of the spans from separating from each other vertically, and drawing or forcing them together in case they do not come exactly in alignment with each other when lowered. In the opposing end of the span D' (or in the opposite pier or abutment) are mounted three blocks L^5 working inward and outward each in a guide L^6 and each actuated by an adjusting-screw L^7 threaded through a stationary block L^8; the outer end of each screw L^7 being headed so as to turn in the corresponding movable block L^5 and the opposite ends of the screws being squared to receive a wrench or otherwise formed to expedite the turning of the screws. Thus by turning the screws L^7 in one or the opposite direction, the blocks L^5 are brought into position for contact with the nuts L' so as to bear against the same when the spans are lowered. When the nuts L' are moved inward the outer ends of the toggle-arms L^3 are carried inward away from the inner ends of the recesses *d* and the free ends of the bridge-spans are permitted to separate vertically from each other; or the free end of a single span is free to separate vertically from the opposite pier or abutment, in the case of a single-span bridge.

The connection between the beams G' and the disks or wheels K is such that when the gear-wheel G^2 is first moved to raise the span D it first draws the beams G' to the left sufficiently to oscillate the disks K through about one-fourth of a revolution, causing the beveled gears K' to rotate the shafts K^6, K^9 and K^{12} in such manner as to move the nuts L' inward and unlock the span, as above described. At the completion of this oscillation of the disks K they are stopped from further inward movement by a stop-nut M which is threaded adjustably upon the inner end of a rod M', and which moves outward and strikes the inner end of a boss M^2 at the upper end of the column B^3. The rod M' passes through the boss M^2, also extends longitudinally beneath the floor of the span D (preferably working through suitable guides, as *m*) and is connected to the disk K preferably about a quarter of the way around the point of connection of the beam G'. While the span is being lowered the point of connection of the beams G' is inwardly opposite from the center of the disks K, or, in other words, the disks remain "on the dead center," so that the outward thrust of the beams G' serves to lower the span; the locking mechanism remaining idle. Just as the span reaches the lowest limit of its movement, the nut M again strikes the boss M^2, rocking the disks K outward and raising the beams G' out of alignment with the center of the disks K. The disks K then continue to rock outward and the nuts L' are moved outward so as to lock the locking-mechanism. Other means may obviously be employed to give a similar movement to the said disks, that described being only one of many that may be employed for this purpose.

When the span is to be raised, it is necessary to raise the outer ends of the rails C upon the approach B so as to enable the inner ends of the rails upon the span to clear the outer ends of the approach-rails. For this purpose I provide a rock-arm N which is pivoted upon a rock-shaft N' extending transversely of the approach. The rock-shaft N' carries a number of spurs *n* which engage beneath the ends of the rails, while the lower end of the rock-arm N extends into the path

of movement of a shoulder N^2 upon the rack-bar G. Thus when the rack-bar moves inwardly the shoulder N^2 strikes the lower end of the rock-arm N and causes the spurs *n* to raise the outer ends of the rails C on the approach. During its inward movement the inner end of the rack-bar G is supported by a truck O the wheels of which run upon rails O′ supported by brackets *o*, or otherwise, upon the support B. The rack-bar G is held down into engagement with the gear-wheel G^2 by a cross-rod or roller P secured in the approach structure so as to immediately overlay the rack-bar.

The locking mechanism located at the outer end of the span is intended more particularly to prevent the meeting ends of two spans from rising or falling past each other, and is not obviously effectual in preventing such spans from rising or falling together or in unison. This latter result is accomplished by means of a pair of pendent locking-arms S which are carried by the rack-bar G and which normally engage beneath the inner end of the stop-bar J^2. When the rack-bar G is moved inward, at the commencement of the raising operation of the gear wheel G^2, the locking-arms S are moved inward so as to cause a roller *s*, carried by the lower ends of the arms, to clear the stop-bar J^2. When the span has been lowered the continued outward movement of the rack-bar G carries the locking-arms S outward past the inner end of the stop-bar J^2, causing the roller *s* to travel beneath an inclined surface *s′* at the inner end of the stop-bar J^2 and thus locking the span against rising—particularly should the actuating mechanism become disabled and release the span. It is the intention to make the locking-arm J^2 of such strength as to enable it to resist even a maximum load at the outer end of the span, by abutting against the under side of the approach B even should the spans not abut at their outer ends and thereby prevent further downward movement thereof.

In an approach of the kind illustrated, wherein the meeting point of the two spans is considerably elevated above the supports on which the spans rest and roll, the spans are preferably arranged to abut together when closed, so as to form an arch, it being obvious that inasmuch as the shore ends of the spans are held from outward movement on their supports, the abutting together of the free ends of the spans will prevent the sinking of the same under a load, and by giving suitable stiffness to the spans the bridge when closed possesses all the advantages gained by the use of an arched bridge. The adjustable blocks L^5 L^5 are provided especially for the purpose of insuring actual contact of the abutting ends of the spans notwithstanding variations in the position of the ends of the spans proper produced by variations of temperature or from other causes. The arrangement of the sliding blocks or nuts L′ L′ so that they will be advanced into contact with the blocks L^5 L^5 is obviously desirable in order that the abutting parts of the bridge may not interfere with each other in the closing or opening of the spans, the said nuts being moved toward and brought into contact with the blocks L^5 L^5 after the spans are closed by the mechanism and in the manner hereinbefore described. It is obvious that in the case of a bridge arranged to form an arch when closed, such as is herein shown, the inwardly projecting arm or part of the span which engages the overhanging part of the bridge approach is relieved from the strain which would be incident to the support of the entire load solely by the upward pressure of the said arm or projection against said overhanging part. In all cases, however, even when the spans are arranged to form an arch, as described, I prefer to employ a positive stop to limit the descent of the span when it reaches a horizontal position, but this stop need not necessarily be of sufficient strength to hold the span horizontal under a load.

In some cases, as for instance where the center of the bridge is not sufficiently elevated above the supporting surfaces upon which the spans rest to permit the use of the arch principle, or in road bridges adapted for carrying relatively small loads, the abutting together of the free ends of the spans will not be relied upon for the purpose of carrying the load, but the engagement of the rear or inner ends of the spans with the overhanging parts of the bridge approach will be alone relied upon for sustaining the free ends of the spans. In such case it is obvious that each span will operate in the same manner as the well known cantalever bridges. A structure of this kind is especially useful in the case of low bridges or those in which the bridge floor is necessarily located only a short distance above the supports on which the spans rest, as would be the case where the roadway is only slightly elevated above the surface of the water in a river to be spanned by the bridge. It will of course be understood in this connection that the bridge floor need not bear any definite vertical relation to the level of the said supporting surfaces or to the curved parts of the bridge resting thereon, but that such flooring may be supported at any desired height relatively to the supporting or truss structure of the bridge, as is common in other bridges.

In a bridge subjected to heavy traffic, such for instance as the railroad bridge herein illustrated, I prefer to so proportion the parts of the bridge that the spans will uphold the load carried thereby, either by contact of their free ends with each other, or by the engagement of the inner ends of the bridge with the overhanging part of the bridge approach; this construction having the advantage that the two spans will sustain each other independently of the cantalever action of the spans in case any accident should happen by which

the cantalever principle should prove ineffective, while on the contrary, the load will be sustained entirely by the engagement of the said arm or projection with the overhanging part of the bridge structure in case the arch principle should fail to operate, as would be the case if the load should come upon one span of the bridge when the other span was not in position to coact with it.

As far as the main features of my invention are concerned, it is obvious that the curved part of the structure of the bridge need not necessarily be formed in a circular curve, but may be of other shape, and also that the supporting surface on which it rests may be curved instead of straight, and if straight need not necessarily be in a horizontal position; it being obvious that the general advantages arising from the construction shown will be obtained when the contact surfaces of the curved part of the span and the supporting surface be made of other than the exact shape shown.

I claim as my invention—

1. A lift-bridge having a movable span provided at one end with a curved part adapted to rest and roll upon a stationary supporting surface, substantially as described.

2. A lift-bridge having a movable span provided at one end with a segmental or sector-shaped part adapted to rest and roll upon a horizontal supporting surface, substantially as described.

3. A lift-bridge having a movable span provided at one end with a curved part adapted to rest and roll upon a supporting surface, and means holding the said curved part from moving or slipping on said surface, substantially as described.

4. A lift-bridge having a movable span provided at one end with a curved part adapted to rest and roll upon a supporting surface, and teeth or projections on the said curved part adapted to interlock with projections on the supporting surface to hold the said curved part from moving or slipping on said surface, substantially as described.

5. A lift-bridge having a movable span provided at one end with a curved part adapted to rest and roll upon a stationary supporting surface, and actuating devices for moving the span acting upon the span to give oscillatory movement thereto, substantially as described.

6. A lift-bridge having a movable span provided at one end with a segmental or sector-shaped part adapted to rest and roll upon a horizontal supporting surface, and means for moving the span comprising a horizontally movable part connected with the span at or near the central point of said segmental or sector-shaped part, substantially as described.

7. A lift-bridge having a movable span provided at one end with a curved part adapted to rest and roll upon a supporting surface, said span being counterpoised and having its center of gravity in such position as to hold the span at an intermediate point in its throw when free from restraint, substantially as described.

8. A lift-bridge having a movable span provided at one end with a curved part adapted to rest and roll upon a supporting surface, said span being counterpoised and having its center of gravity in such position that the span will rest, when unrestrained, in an intermediate point of its throw, and actuating mechanism operatively connected with the span and acting to move the same positively in either direction, substantially as described.

9. A lift-bridge having a movable span provided with a curved part adapted to roll upon a supporting surface, a rack-bar carried by the span, and an actuating mechanism embracing a gear wheel engaging the rack-bar and acting to move the same longitudinally to raise and lower the outer end of the span, substantially as described.

10. A lift bridge consisting of two movable spans, each provided with a curved part adapted to rest upon a supporting surface, and locking devices on the adjacent ends of the said spans, comprising suitably actuated parts movable vertically relatively to the spans, whereby the ends of the spans may be drawn into alignment with each other, substantially as described.

11. A lift-bridge having a movable span provided with a curved part adapted to rest and roll upon a supporting surface, a locking mechanism located at the outer end of the span and means for giving oscillatory movement to the span having operative connection with the locking mechanism whereby the locking mechanism is automatically actuated when the span is moved, substantially as described.

12. A lift-bridge having a movable span provided with a curved part adapted to rest and roll upon a supporting surface, a locking mechanism located at the outer end of the span and means for actuating the span comprising a reciprocating part connected with the locking mechanism by means affording lost motion between the parts whereby the locking mechanism is automatically actuated when the bridge is moved, substantially as described.

13. A lift-bridge having a movable span provided with a curved part adapted to rest and roll upon a supporting surface, a locking mechanism located at the outer end of the span, an oscillating disk on the span having operative connection with said locking mechanism, and actuating mechanism for the bridge comprising a reciprocating part eccentrically connected with said disk, substantially as described.

14. A lift-bridge having a movable span provided with a curved part adapted to rest and roll upon a supporting surface, a locking mechanism located at the outer end of the span an oscillating disk on the span having operative connection with said locking mech-

anism, a rack-bar eccentrically connected with said disk, a gear-wheel engaging said rack-bar and an actuating mechanism operatively connected with the gear-wheel, substantially as described.

15. A lift-bridge having a movable span provided with a curved part adapted to rest and roll upon a supporting surface, a toggle lever locking mechanism located at the outer end of the span, an oscillating disk mounted on the span and having operative connection with said locking mechanism, and actuating mechanism for the span comprising a reciprocating part eccentrically connected with the disk, substantially as described.

16. A lift-bridge having a movable span provided with a curved part adapted to rest and roll upon a supporting surface, a toggle lever locking mechanism located at the outer end of the span, an oscillating disk mounted on the span and having operative connection with said locking mechanism, actuating mechanism for the span comprising a reciprocating part eccentrically connected with the disk and means acting on the disk to give initial movement thereto sufficient to enable the reciprocating part to turn the disk whereby the latter will be in position to be moved by the said reciprocating part when the bridge is closed, substantially as described.

17. A lift-bridge having a movable span provided with a curved part adapted to rest and roll upon a supporting surface, a toggle lever locking mechanism located at the outer end of the span, an oscillating disk mounted on the span and having operative connection with said locking mechanism, a rack-bar eccentrically connected with the disk, a movable stop carried by the span and also eccentrically connected to the disk and engaging a stationary part of the bridge structure, a gear wheel engaging the rack-bar, and an actuating mechanism for revolving said gear-wheel, substantially as described.

18. A lift-bridge consisting of two movable spans each provided with a curved part adapted to rest and roll upon a supporting surface, means holding the said curved parts from moving or slipping on said supporting surfaces, the said spans being adapted to abut against each other at their free ends when in their lowered position so as to constitute an arch, substantially as described.

19. A lift-bridge having a movable span provided at its inner end with a curved part adapted to rest and roll upon a supporting surface and provided also at its inner end with an arm or projection adapted to engage an overhanging stationary part of the bridge pier or shore structure to limit the downward movement of the outer end of the span, substantially as described.

20. A lift-bridge consisting of two movable spans, each provided with a curved part adapted to rest and roll upon a supporting surface, and adapted to engage with their inner ends with an overhanging stationary part of the bridge pier or shore structure, and means holding said curved parts from moving or slipping on said supporting surfaces, the said spans being adapted to abut against each other at their free ends when in their lowered position so as to constitute an arch, substantially as described.

21. A lift-bridge having a movable span provided at its inner end with a curved part adapted to rest and roll upon a supporting surface, said span being adapted to engage at its inner end with an overhanging stationary part of the bridge pier or shore structure, and a locking device applied to connect the span with the overhanging part of the pier or shore structure to hold the span from movement, substantially as described.

22. A lift-bridge having a movable span provided at its inner end with a curved part adapted to rest and roll upon a supporting surface, said span being adapted to engage at its inner end with an overhanging stationary part of the bridge pier or shore structure, a locking device applied to connect the span with said overhanging part of the pier or shore structure, and means for actuating the bridge having operative connection with and constructed to move said locking device whereby the same may be automatically actuated, substantially as described.

23. A lift-bridge having a movable span provided with a curved part adapted to rest and roll upon a supporting surface, said span being adapted to engage at its inner end with an overhanging stationary part of the bridge pier or shore structure, a locking device for connecting said arm or projection with said overhanging part, means for actuating the bridge comprising a reciprocating part, which is connected with and moves the span and which has operative connection with said locking mechanism, substantially as described.

24. A lift-bridge having a movable span provided with a curved part adapted to rest and roll on a supporting surface, track-rails upon the span, track rails upon the bridge approach, the ends of which, adjacent to the span, are vertically movable, and actuating devices for lifting the movable ends of said rails when the span is moved, substantially as described.

25. A lift-bridge having a movable span provided with a curved part adapted to rest and roll on a supporting surface, a rack-bar connected with the span, and an actuating mechanism operatively engaging the rack-bar, track rails mounted upon the bridge approach, and rock-arms engaging a shoulder upon the rack-bar and also engaging the ends of the rails to lift the latter, substantially as described.

26. A lift-bridge consisting of two movable spans, each provided with a curved part adapted to rest and roll upon a supporting surface, and movable nuts or blocks upon the end of one span adapted to be shifted into contact with bearing surfaces on the end of the other

span, when the spans are lowered, substantially as described.

27. A lift-bridge consisting of two movable spans, each provided with a curved part adapted to rest and roll upon a supporting surface, and abutting parts on the adjacent ends of the spans of which those on one span are adjustable toward and from those on the other, to secure accurate contact of the same, substantially as described.

28. A lift-bridge consisting of two movable spans, each provided with a curved part adapted to rest and roll upon a supporting surface, locking devices on the adjacent ends of said spans, comprising blocks adapted to bear against contact surfaces, said blocks having operative connection with the actuating devices of the locking mechanism, substantially as described.

In testimony that I claim the foregoing as my invention I affix my signature in presence of two witnesses.

WILLIAM SCHERZER.

Witnesses:

C. CLARENCE POOLE,

ALBERT H. GRAVES.