WEST PEARL RIVER BRIDGE

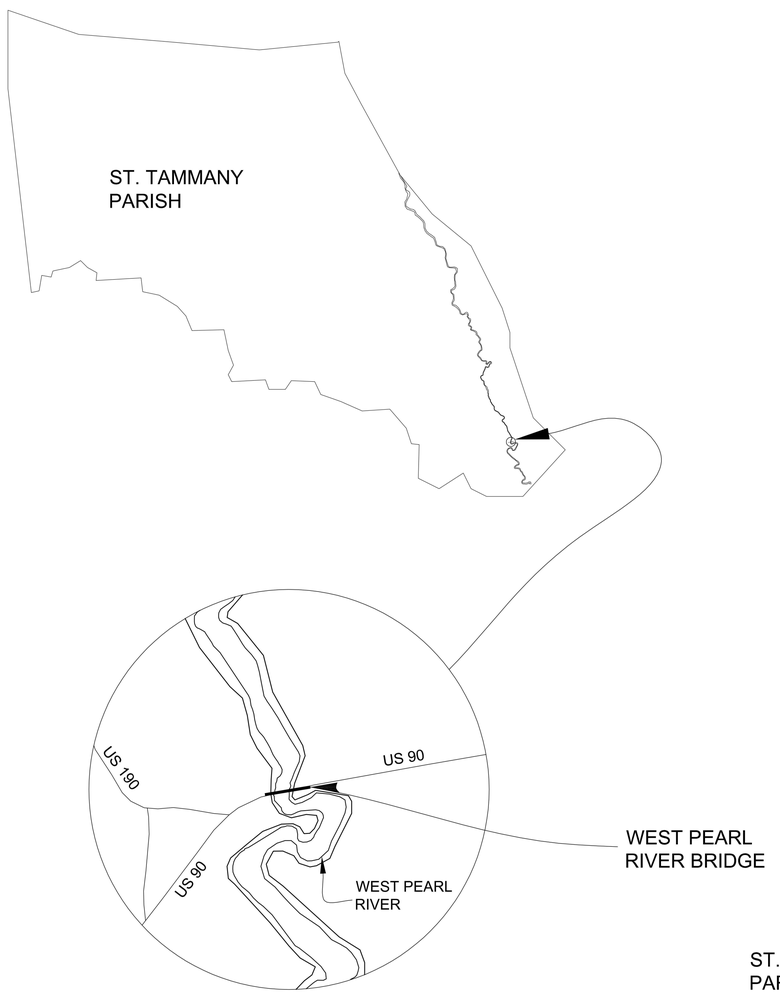

SLIDELL

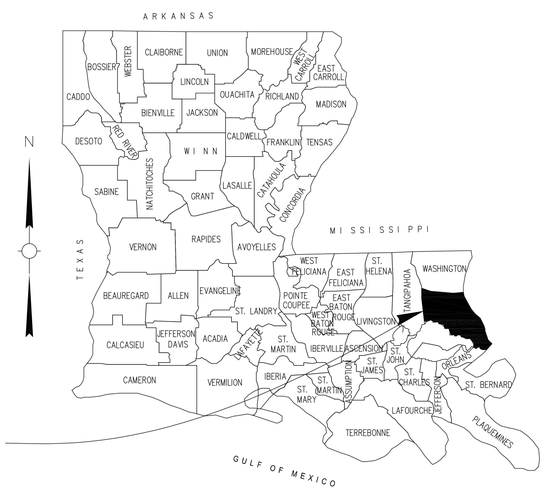

LOUISIANA

LOCATION MAP
Latitude: 30.23075 North
Longitude: -89.670333 West

The West Pearl River Bridge (Bridge Recall No. 058710), designed by the Louisiana Highway Commission and completed in 1933, is significant as one of four bridges constructed to carry US 90/Old Spanish Trail over the Pearl River in St. Tammany Parrish in the early 1930s. The bridge is an essential part of the Rigolets-Pearlington highway shortcut connecting New Orleans to the Mississippi Gulf Coast. Construction of the shortcut created a more direct and efficient route between Louisiana and Mississippi and made a significant contribution to the broad patterns of Louisiana's transportation history.

The West Pearl River Bridge is also significant as an important variation within the vertical lift bridge type - a vertical lift span-drive bridge with a Waddell and Harrington configuration. This variation is demonstrated in the location of the drive machinery on the movable span that operates uphaul and downhaul ropes to raise and lower the span. The West Pearl River Bridge was determined eligible for listing in the National Register of Historic Places in 2012 under Criterion A: Transportation and Criterion C: Design/Engineering at the state level of significance.

This documentation was prepared to fulfill Stipulation IX.5 of the Programmatic Agreement Among the Federal Highway Administration, the Louisiana Department of Transportation and Development, the Advisory Council on Historic Preservation, and the Louisiana State Historic Preservation Officer Regarding Management of Historic Bridges in Louisiana, dated August 18, 2015 and executed September 21, 2015. The Louisiana Department of Transportation and Development (LADOTD) retained Mead & Hunt to prepare this document. It was prepared by Shannon Dolan, Cultural Resource Specialist, of Mead & Hunt, Stephen V. Estopinal, P.E., P.L.S. and Trenton Iglehart, Geodetic Analyst, of SJB Group, LLC. Dietrich Floeter completed the photography. These measured drawings were prepared based on a site visit to complete laser scanning of the bridge, with selective hand measuring in the field to verify measurements.

These measured drawings were prepared based on a site visit to complete laser scanning of the bridge, with selective hand measuring in the field to verify measurements.

LIBRARY OF CONGRESS INDEX NUMBER

HISTORIC AMERICAN ENGINEERING RECORD
LA-31

SHEET 1 OF 5

LOUISIANA

WEST PEARL RIVER BRIDGE
CARRIES U.S. ROUTE 90 (US 90) OVER THE WEST PEARL RIVER
ST. TAMMANY PARISH

SLIDELL

DELINEATED BY: T. IGLEHART, SJB GROUP, LLC., 2017

LOUISIANA HISTORIC BRIDGE INVENTORY
NATIONAL PARK SERVICE
UNITED STATES DEPARTMENT OF THE INTERIOR

IF REPRODUCED, PLEASE CREDIT THE HISTORIC AMERICAN ENGINEERING RECORD, NATIONAL PARK SERVICE, NAME OF DELINEATOR, DATE OF DRAWING

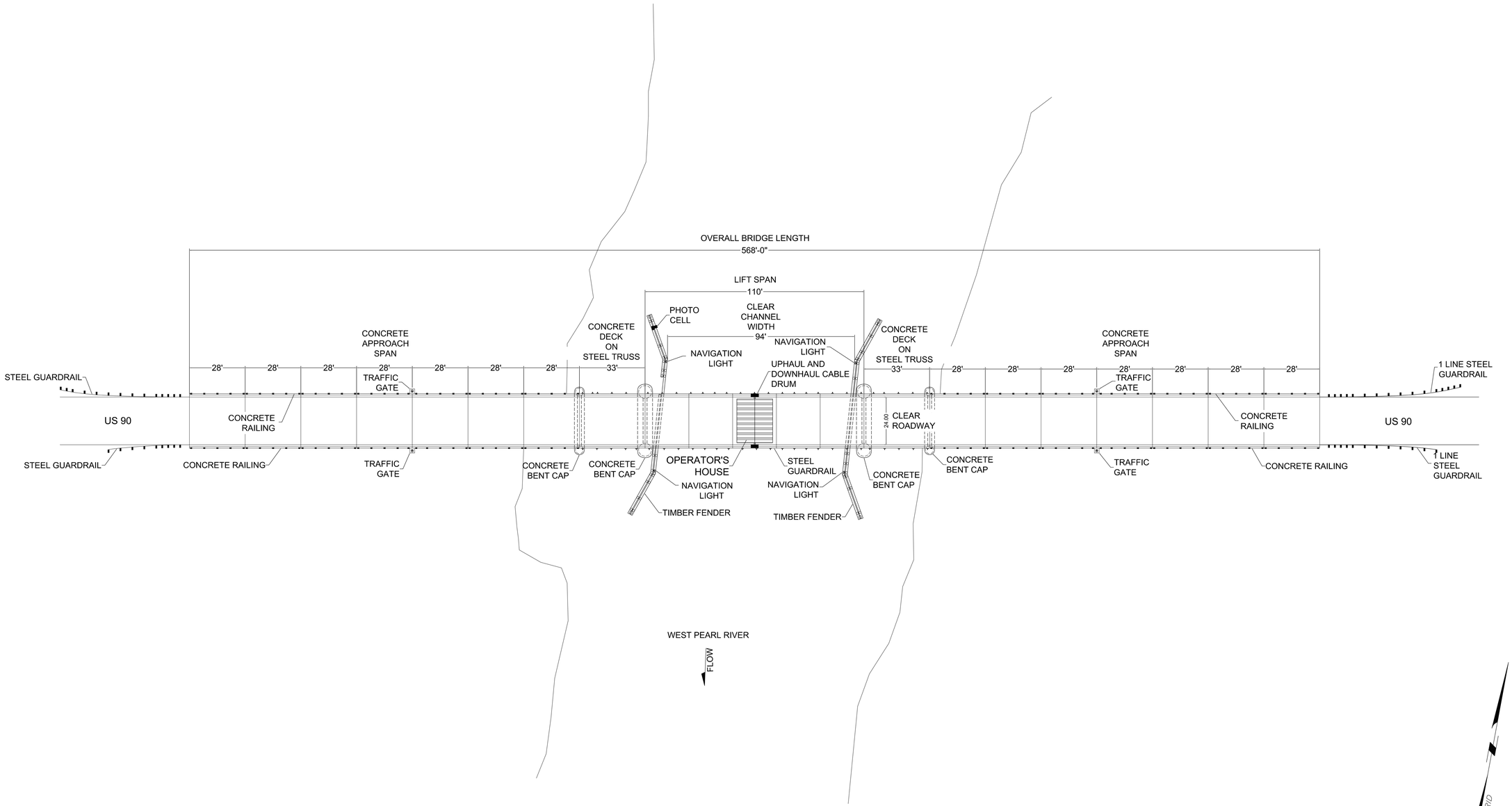

PLAN VIEW

DELINEATED BY: T. IGLEHART, SJB GROUP, LLC., 2017

LOUISIANA HISTORIC BRIDGE INVENTORY
NATIONAL PARK SERVICE
UNITED STATES DEPARTMENT OF THE INTERIOR

SLIDELL

WEST PEARL RIVER BRIDGE
CARRIES U.S. ROUTE 90 (US 90) OVER THE WEST PEARL RIVER
ST. TAMMANY PARISH

LOUISIANA

SHEET 2 OF 5

HISTORIC AMERICAN ENGINEERING RECORD
LA-31

LIBRARY OF CONGRESS INDEX NUMBER

IF REPRODUCED, PLEASE CREDIT THE HISTORIC AMERICAN ENGINEERING RECORD, NATIONAL PARK SERVICE, NAME OF DELINEATOR, DATE OF DRAWING

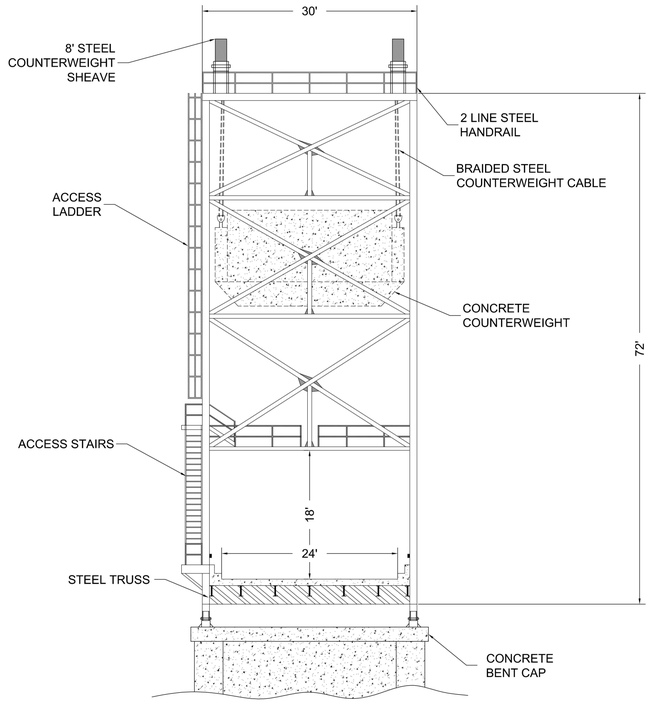

SECTION "A-A"
(NOT TO SCALE)

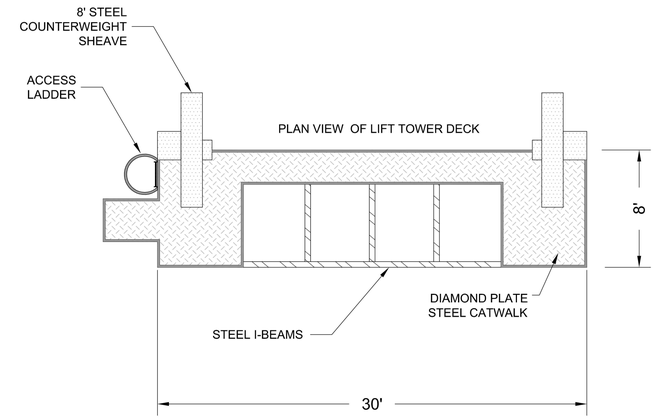

DETAIL "B"
(NOT TO SCALE)

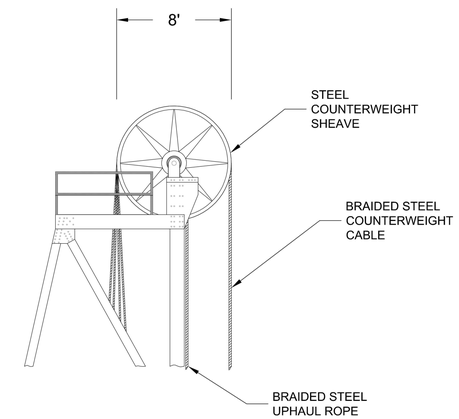

DETAIL "C"
(NOT TO SCALE)

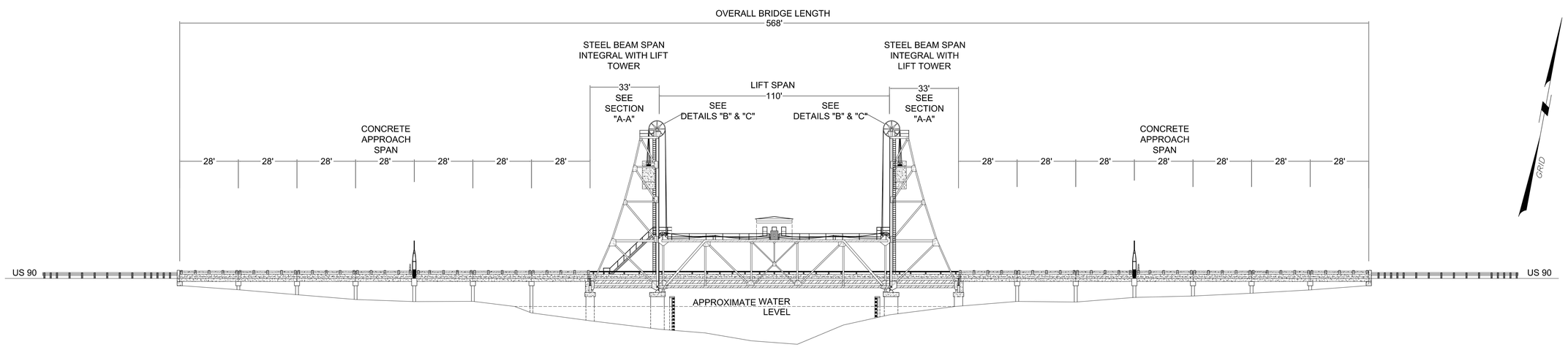

PROFILE VIEW

25' 0 25'

DELINEATED BY: T. IGLEHART, SJB GROUP, LLC., 2017

LOUISIANA HISTORIC BRIDGE INVENTORY
NATIONAL PARK SERVICE
UNITED STATES DEPARTMENT OF THE INTERIOR

WEST PEARL RIVER BRIDGE
CARRIES U.S. ROUTE 90 (US 90) OVER THE WEST PEARL RIVER
ST. TAMMANY PARISH

SLIDELL

LOUISIANA

SHEET 3 OF 5

HISTORIC AMERICAN ENGINEERING RECORD
LA-31

LIBRARY OF CONGRESS INDEX NUMBER

IF REPRODUCED, PLEASE CREDIT THE HISTORIC AMERICAN ENGINEERING RECORD, NATIONAL PARK SERVICE, NAME OF DELINEATOR, DATE OF DRAWING

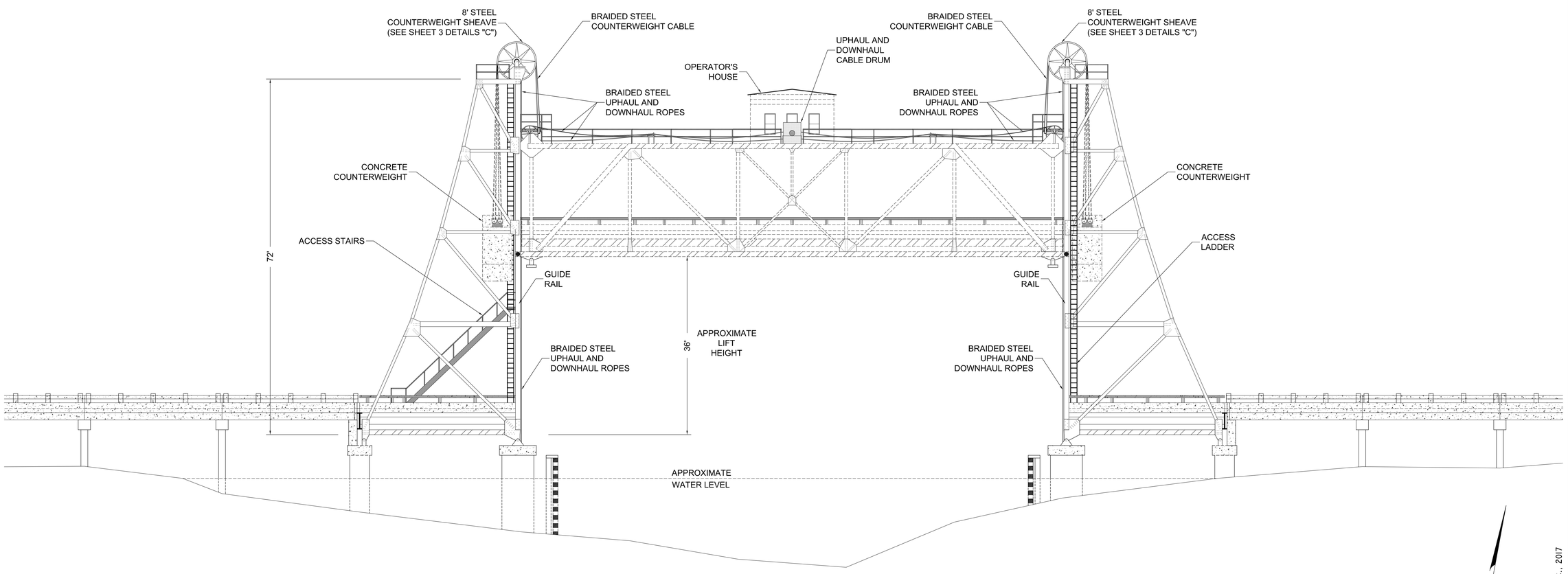

OPERATIONAL VIEW

DELINEATED BY: T. IGLEHART, SJB GROUP, LLC., 2017

LOUISIANA HISTORIC
BRIDGE INVENTORY
NATIONAL PARK SERVICE
UNITED STATES DEPARTMENT OF THE INTERIOR

SLIDELL

WEST PEARL RIVER BRIDGE
CARRIES U.S. ROUTE 90 (US 90) OVER THE WEST PEARL RIVER
ST. TAMMANY PARISH

LOUISIANA

SHEET 4 OF 5

HISTORIC AMERICAN
ENGINEERING RECORD
LA-31

LIBRARY OF CONGRESS
INDEX NUMBER

IF REPRODUCED: PLEASE CREDIT THE HISTORIC AMERICAN ENGINEERING RECORD, NATIONAL PARK SERVICE, NAME OF DELINEATOR, DATE OF DRAWING

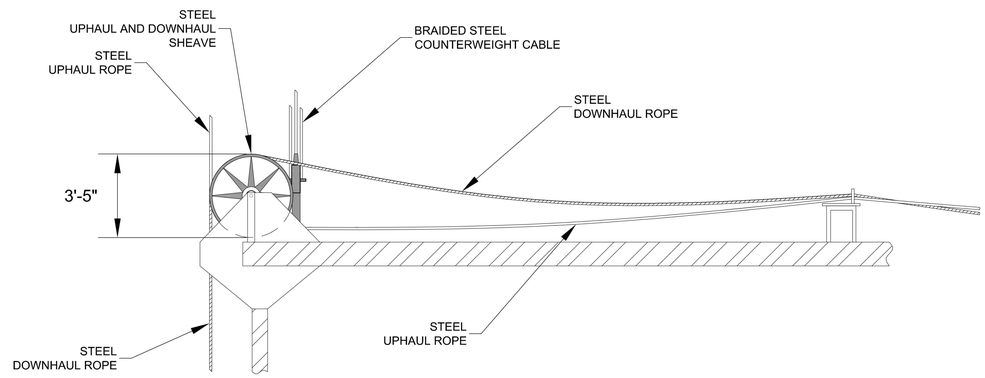

DETAIL "D"
(NOT TO SCALE)

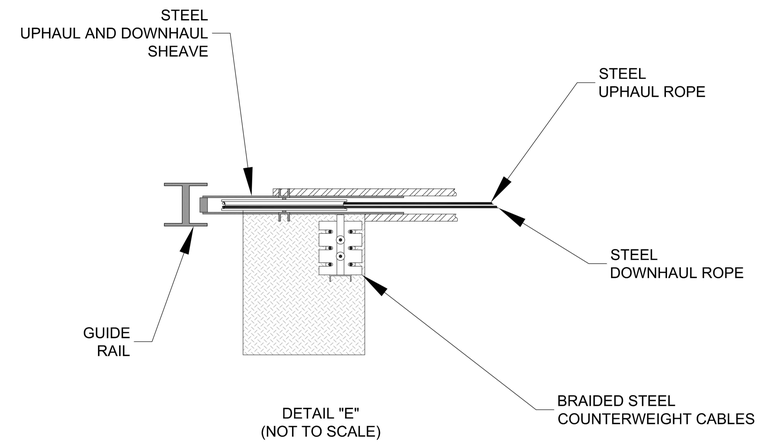

DETAIL "E"
(NOT TO SCALE)

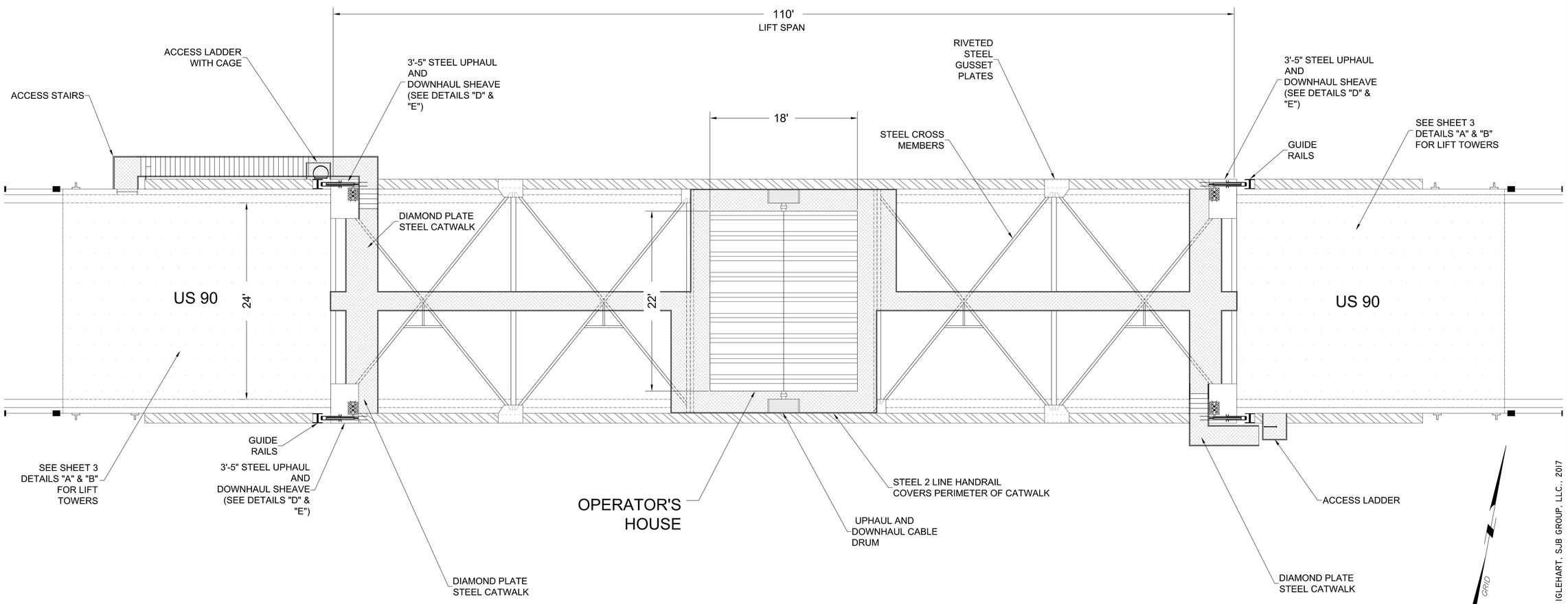

LIFT SPAN PLAN VIEW

DELINEATED BY: T. IGLEHART, SJB GROUP, LLC., 2017

LOUISIANA HISTORIC
BRIDGE INVENTORY
NATIONAL PARK SERVICE
UNITED STATES DEPARTMENT OF THE INTERIOR

SLIDELL

WEST PEARL RIVER BRIDGE
CARRIES U.S. ROUTE 90 (US 90) OVER THE WEST PEARL RIVER
ST. TAMMANY PARISH

LOUISIANA

SHEET 5 OF 5

HISTORIC AMERICAN
ENGINEERING RECORD
LA-31

LIBRARY OF CONGRESS
INDEX NUMBER

IF REPRODUCED, PLEASE CREDIT THE HISTORIC AMERICAN ENGINEERING RECORD, NATIONAL PARK SERVICE, NAME OF DELINEATOR, DATE OF DRAWING

29

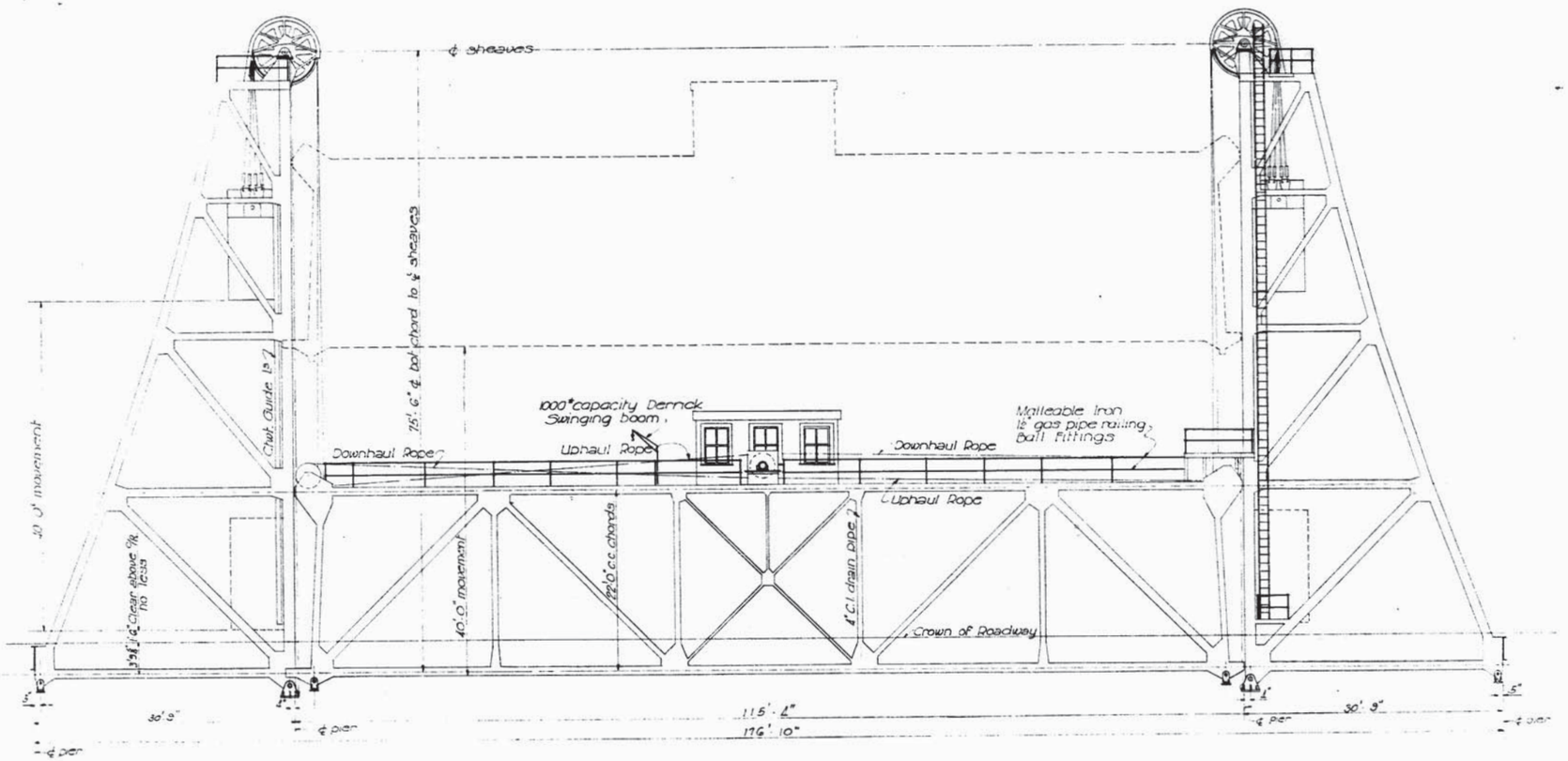

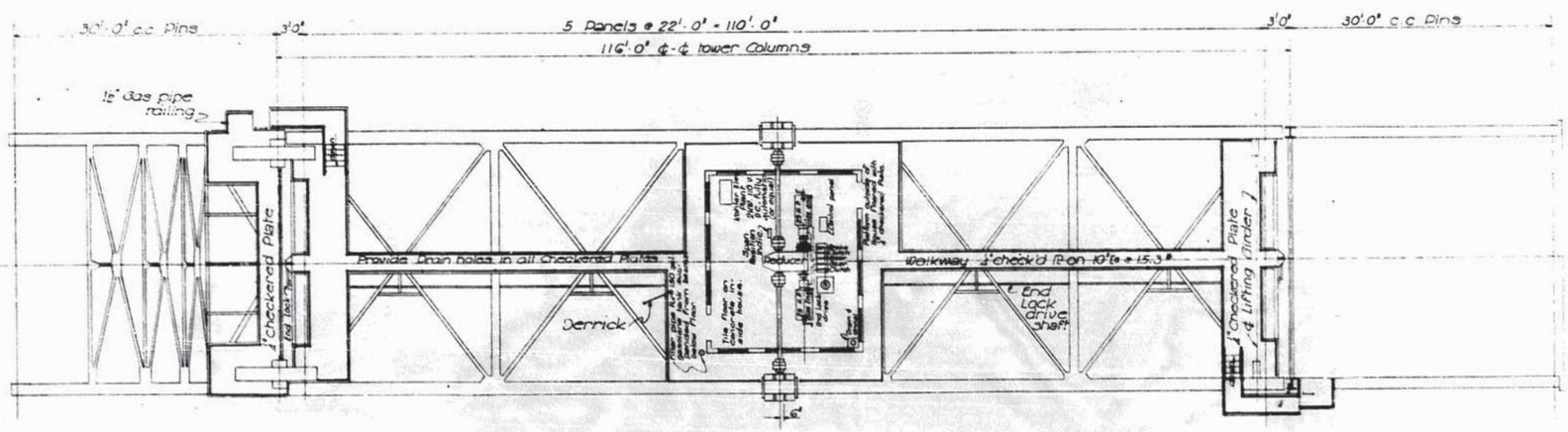

Note: Navigation Lights to be oil burning

FINAL QUANTITIES
ESTIMATED QUANTITIES

Structural Steel	~~452,457~~ * 456,089#
Class AA Conc	113.39 cu yd
Class A Conc (CNT.)	~~199.62 cu yd~~ 141.68 cu yd
Reinf Steel	34,349 #

NOTE:
FOR STRUCTURAL STEEL WEIGHTS SEE MR. LANT'S LETTER - OCT. 10, 1933.
* ADDITIONAL "AA" CONC. SEE OPR'S. HOUSE FLOOR PLAN SHEET NO. 6
# COUNTERWEIGHT CL "A" CONC. SEE "AS BUILT" PLAN SHEET NO. 15

STANDARD PLAN
GENERAL LAYOUT
110'-0" VERTICAL LIFT SPAN
24'-0" ROADWAY
DOUBLE CURBS

LOUISIANA HIGHWAY COMMISSION
BATON ROUGE, LA. OCT. 1932
Designed L. Duclos Detailed L. Duclos Traced
Checked Checked Checked L. Duclos
Chief of Bridge Designing Engineer

Sheet 1 of 3

S-L-2

AS BUILT PLANS

30

SHEET 28

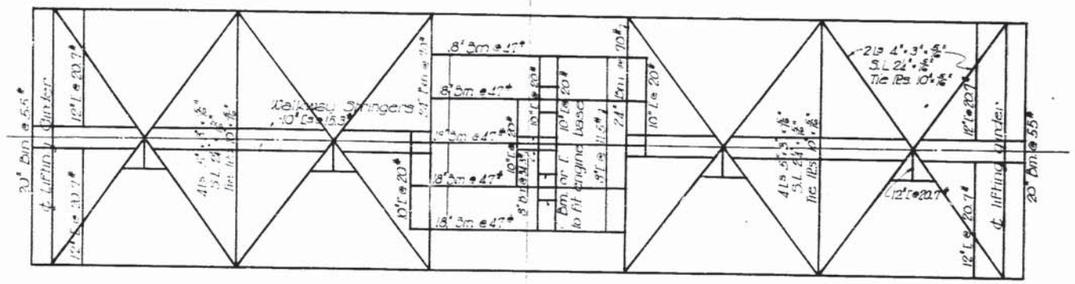

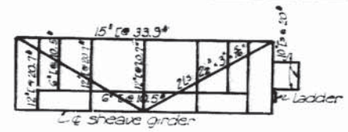

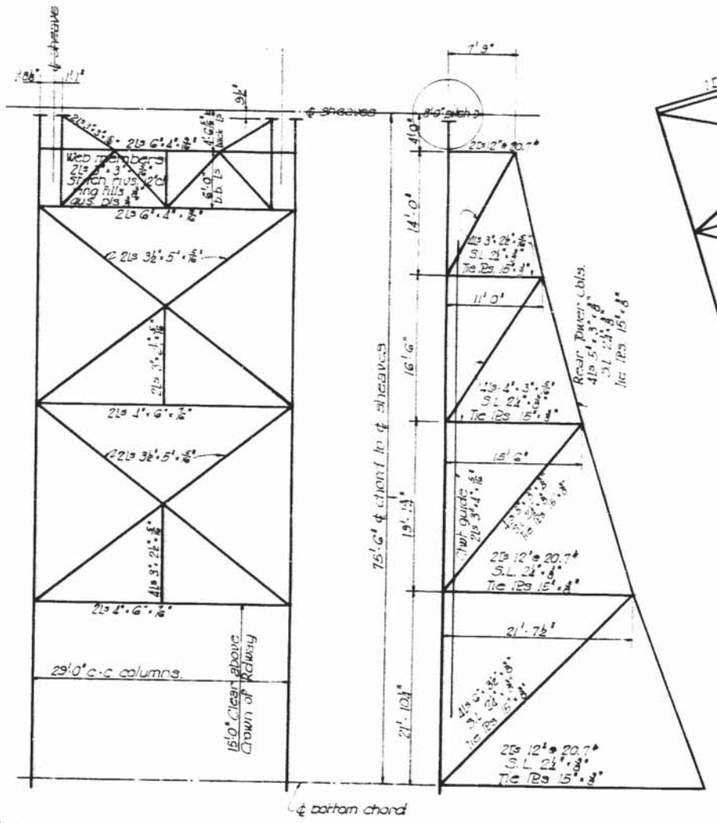

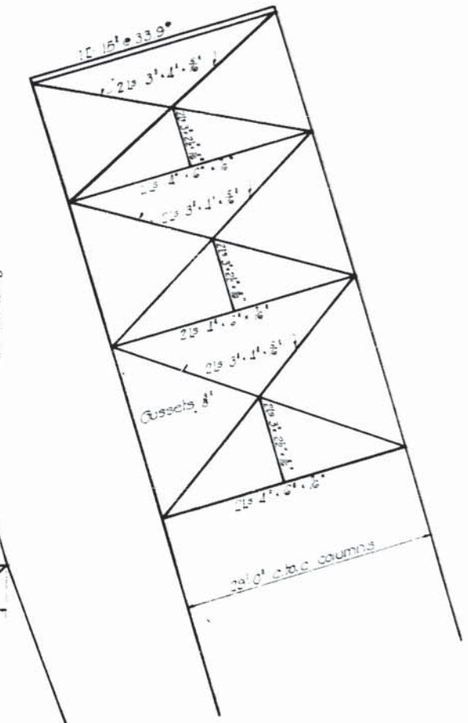

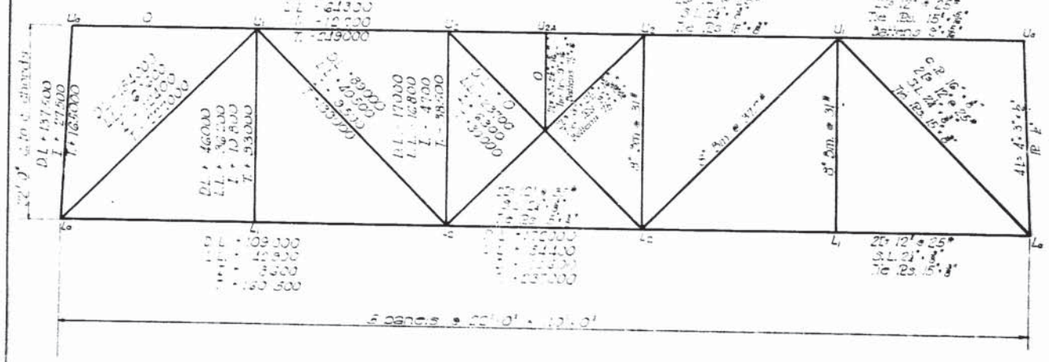

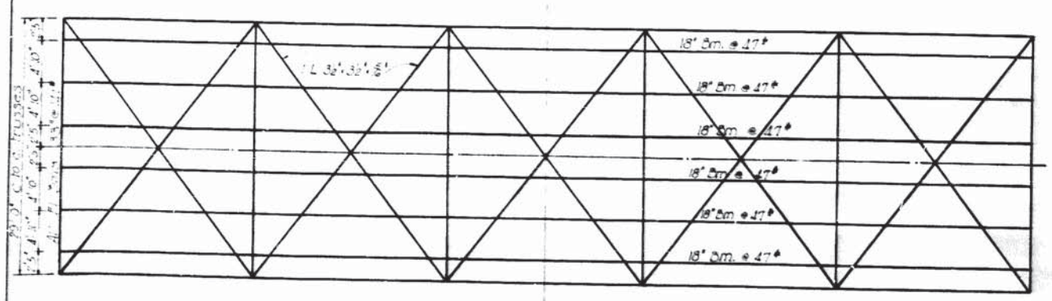

General Notes:
Specifications: Louisiana Highway Commission.
Live loading: H-15. Dead load: Calculated weight of concrete and steel. All material structural steel unless noted. Rivets to be ¾" ϕ and open holes 13/16" ϕ unless noted. Ends of Floor Beams to be milled after connection angles are riveted in place. Stringers not to be riveted to Floor beams until after Lift span has been swung. Trusses to be cambered so that bottom chord will have ½" permanent camber under dead load. If trusses are to be used on a vertical curve, geometric lengths of members to be figured so that the bottom chord and tops of floor beams will conform to vertical curve, then trusses cambered for dead load only. Length of bottom chord under full dead load to be 110'0" c. to c. of end pins. Towers to be cambered so that front legs will be vertical under dead load. All cast steel shoes to be paid for as struct. steel. Cost of cast iron drains and all expansion or contraction joint material, except structural steel, to be included in unit price bid for concrete in floor slab. Structural Steel machinery supports to be paid for as Structural Steel. Floor slabs & curbs to be cl. AA conc. Counterweight concrete to be Class A. Net weight of each piece of machinery to be marked plainly thereon. Stringer lengths to be detailed so that all floor beams will be straight after span has been swung. Gas Pipe Hand rail to be paid for as Fab. Structural Steel.

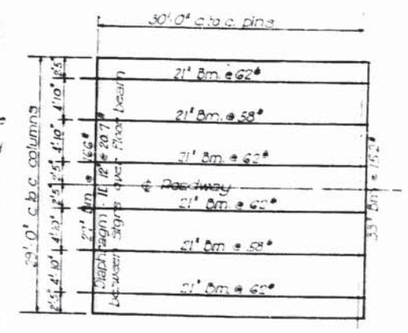

Roanke Co. 1933
W. L. Hampton

STANDARD PLAN
110 FT. VERTICAL LIFT SPAN
24' 0" ROADWAY
STRESSES AND SECTIONS
LOUISIANA HIGHWAY COMMISSION
BATON ROUGE, LA. OCT. 1932

S-L-2

AS BUILT PLANS

HAER No. LA-31

31

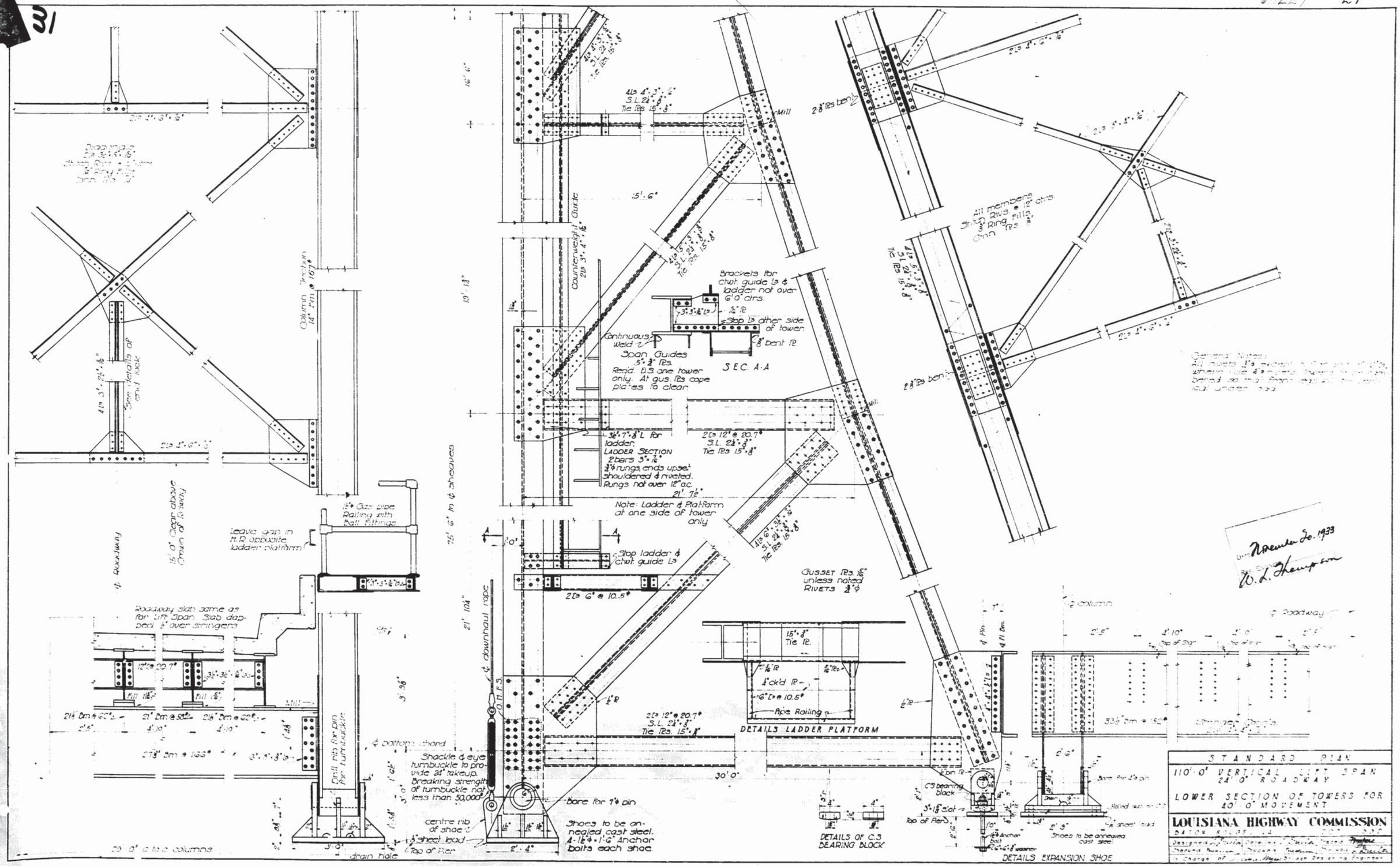

AS BUILT PLANS

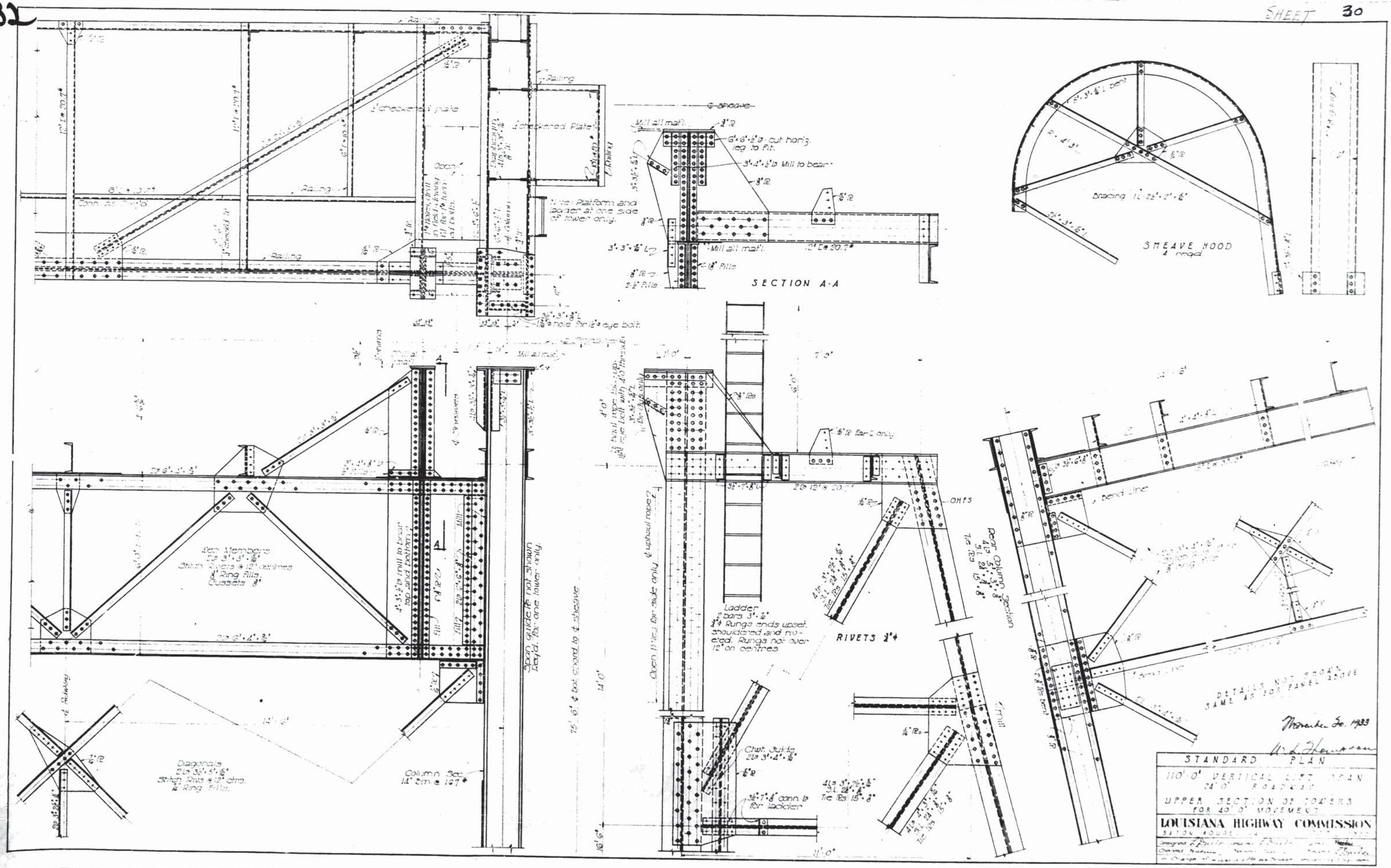

AS BUILT PLANS

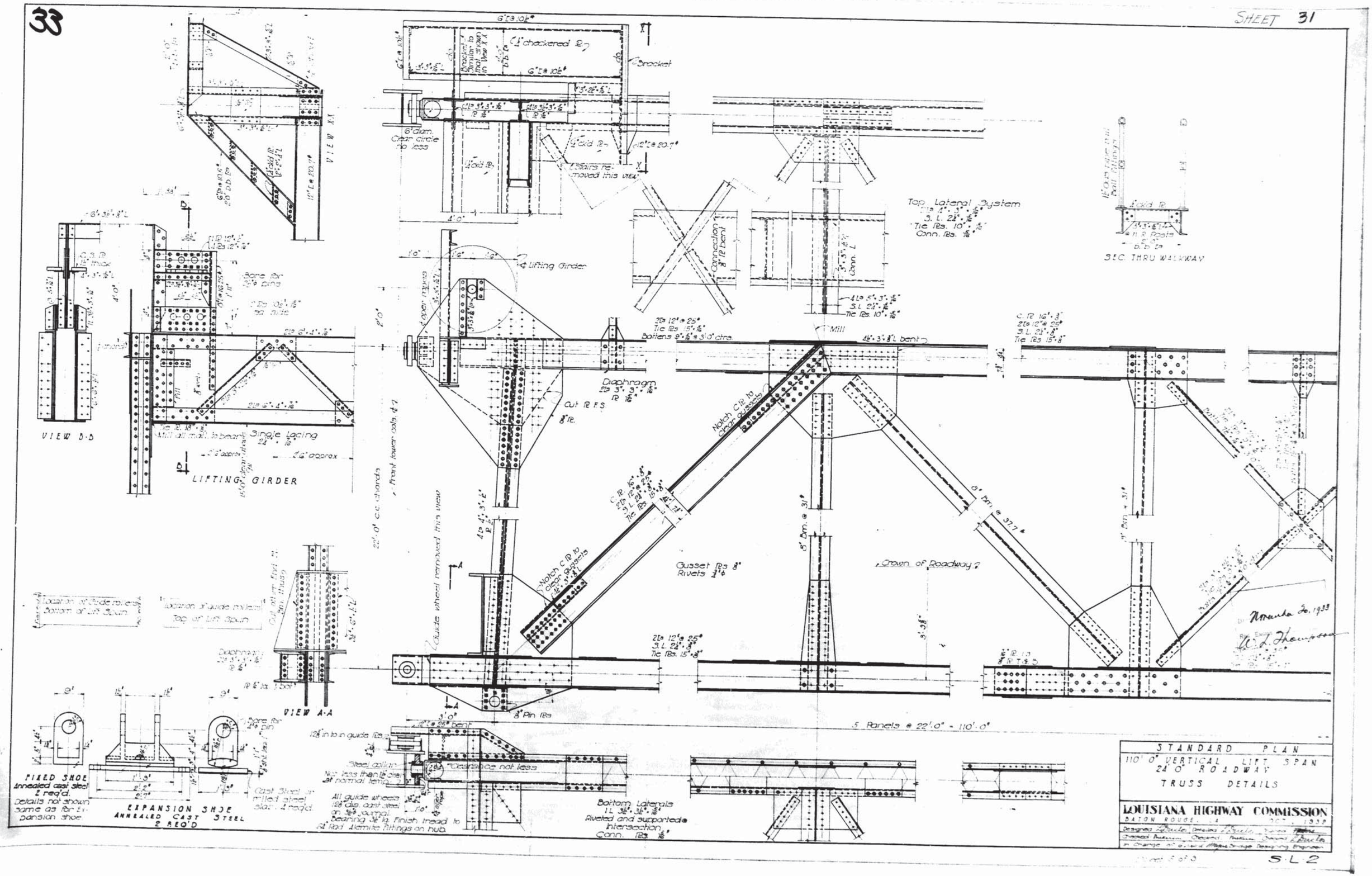

AS BUILT PLANS

34

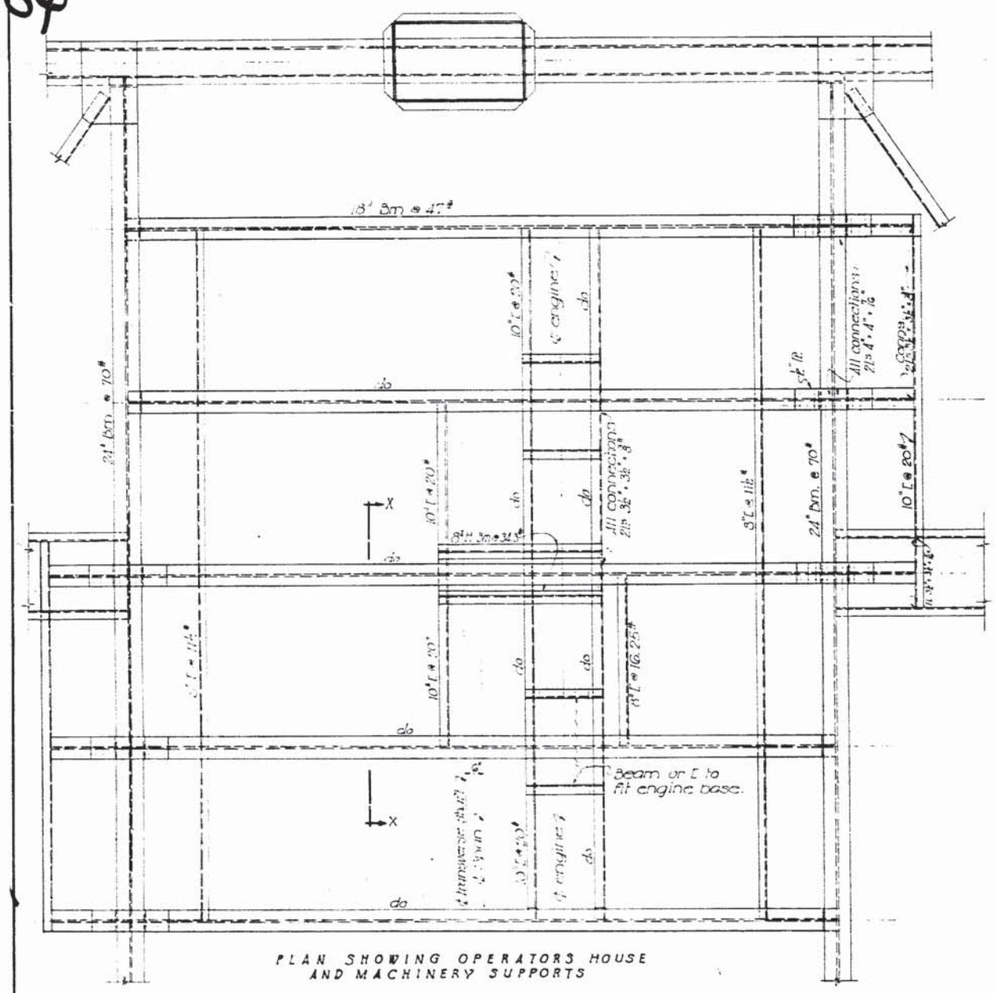

PLAN SHOWING OPERATORS HOUSE AND MACHINERY SUPPORTS

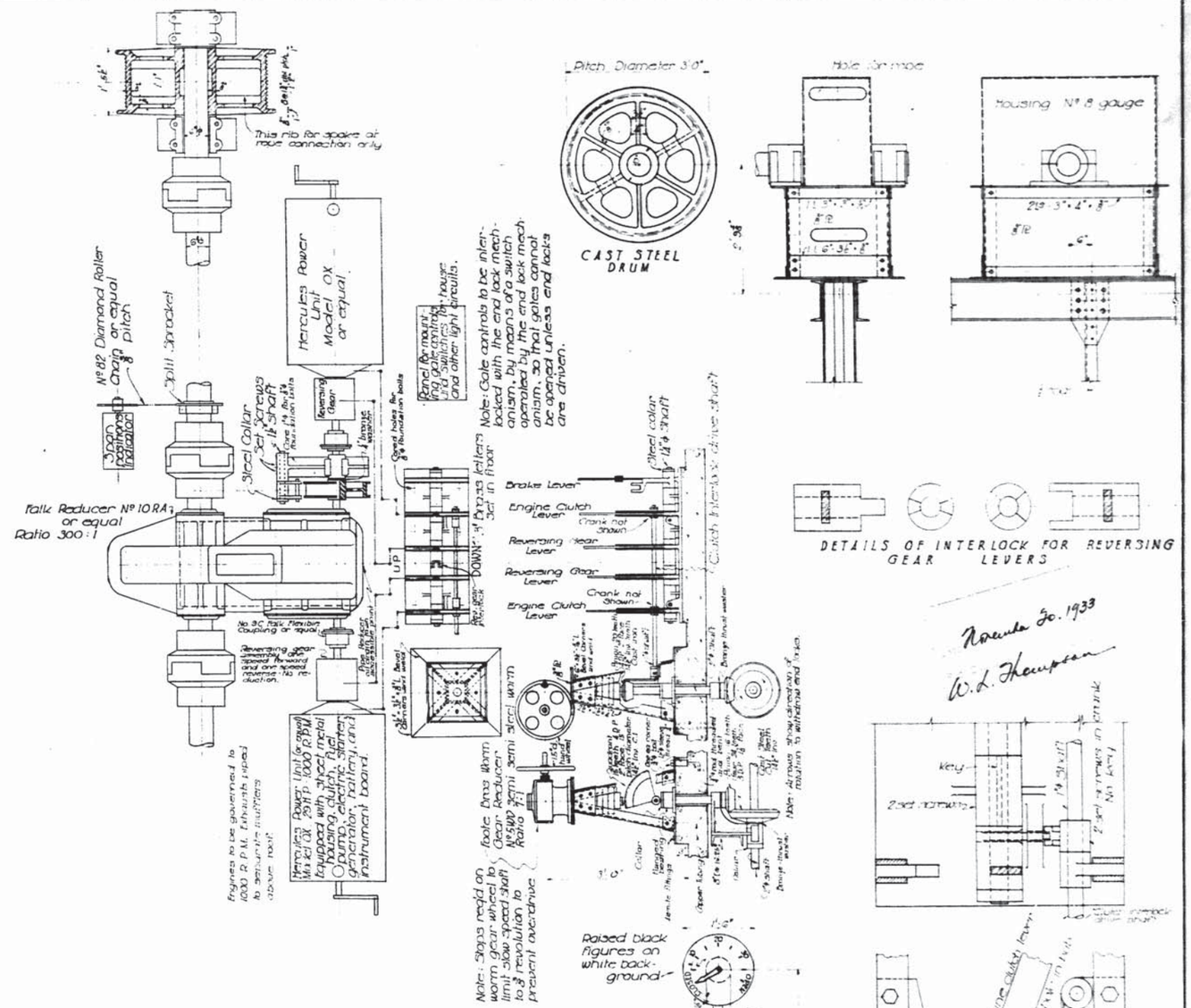
This rib for spokes at route connection only
Hercules Power Unit Model OX or equal
Reversing Gear
Panel for mount. Engine controls and switches for house and other light circuits.
Nº 82 Diamond Roller Chain or equal ⅜" pitch
Span positions indicator
Split Sprocket
Steel Collar Set Screws
1¼" Shaft
Talk Reducer Nº 10 RA or equal Ratio 300:1
No. 30 Talk Flexibin Coupling or equal
Reversing gear lengthening gear speed forward and one speed reverse 10 to 1 reduction.
Engines to be governed to 1000 R.P.M. Exhausts piped to separate mufflers above roof.
Hercules Power Unit Model OX 25 H.P. 1000 R.P.M. equipped with sheet metal housing, clutch, fuel pump, electric starter, generator, battery, and instrument board.
Note: Gate controls to be interlocked with the end lock mechanism, by means of a switch operated by the end lock mechanism. So that gates cannot be opened unless end locks are driven.
Brake Lever
Engine Clutch Lever
Crank not shown
Reversing Gear Lever
Reversing Gear Lever
Crank not shown
Engine Clutch Lever
Steel collar 1¼" Shaft
Clutch interlock on driver shaft
Note: Stops rigid on worm gear wheel to limit slow speed shaft to ⅓ revolution to prevent overdrive
Note: Worm gear reduction 1:1 to 1:1 to 1:1 to

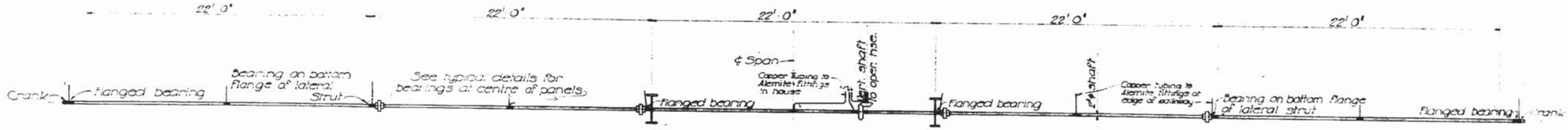

LONGITUDINAL SHAFT FOR END LOCKS DRIVE

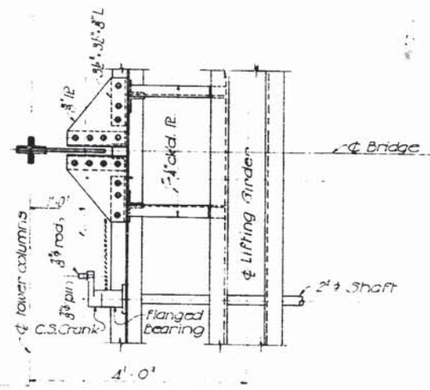

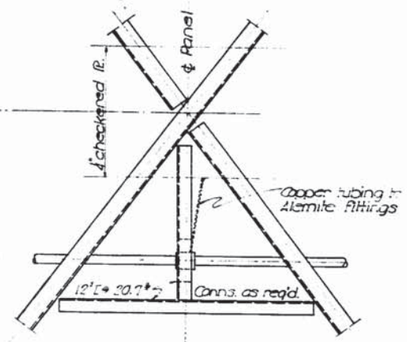

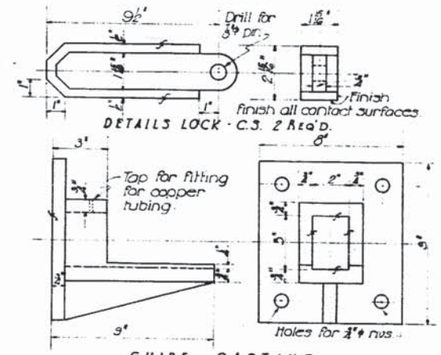

DETAILS LOCK - C.S. 2 REQ'D.

GUIDE CASTING
ANNEALED CAST STEEL
2 REQ'D.

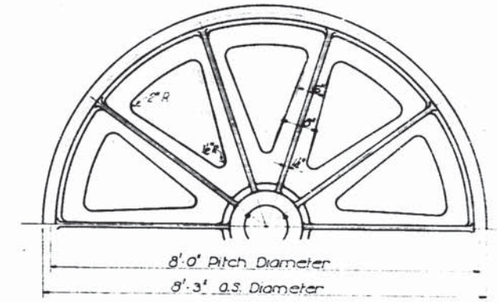

TOWER SHEAVE
4 REQ. ANNEALED CAST STEEL

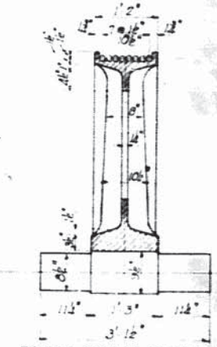

TOWER SHEAVE TRUNNION
4 REQ'D. HEAT TREATED CARBON FORGING CLASS G
A-18-21

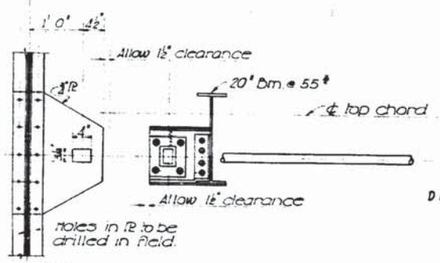

DETAILS OF END LOCK

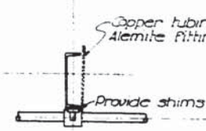

DETAILS OF BEARING SUPPORTS AT CENTRE OF PANEL

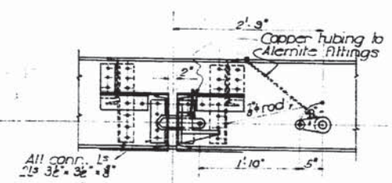

DETAILS END LOCK

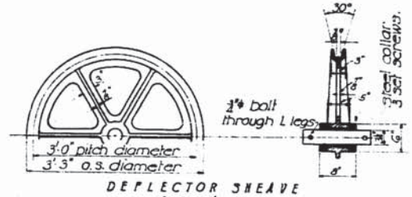

DEFLECTOR SHEAVE
4 REQ'D.

Note: Counterweight ropes to have length stamped on each socket.

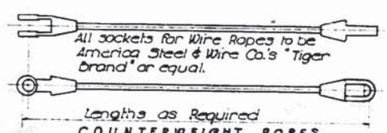

COUNTERWEIGHT ROPES
32 - G - 19 - 1⅛" ϕ IMPROVED PLOW STEEL, HEMP CENTRE. ULTIMATE STRENGTH 146000# per rope

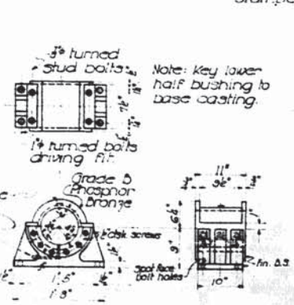

TOWER SHEAVE BEARING
8 REQ. ANNEALED C.S. WITH BUSHINGS

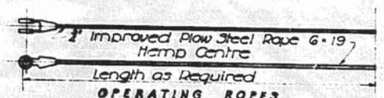

OPERATING ROPES
6 REQ'D.
ULTIMATE STRENGTH 46000# per rope

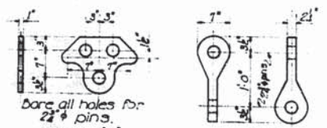

BAR "A"
32 REQ. MED. STEEL

LINK
16 REQ. STEEL FORGING

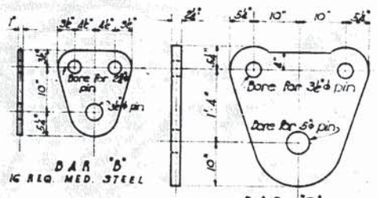

BAR "B"
16 REQ. MED. STEEL

BAR "C"
4 REQ. MED. STEEL

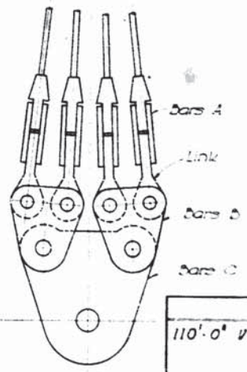

November 20, 1933
W. L. Hampson

STANDARD PLAN
110' 0" VERTICAL LIFT SPAN — 24' 0" ROADWAY

MACHINERY DETAILS

LOUISIANA HIGHWAY COMMISSION
BATON ROUGE, LA. OCT. 1932

Designed: [illegible] Detailed: [illegible] Traced: [illegible]
Checked: [illegible] Checked: [illegible] Traced: [illegible]
In Charge of Design: [illegible] Bridge Designing Engineer

S-L-2

AS BUILT PLANS

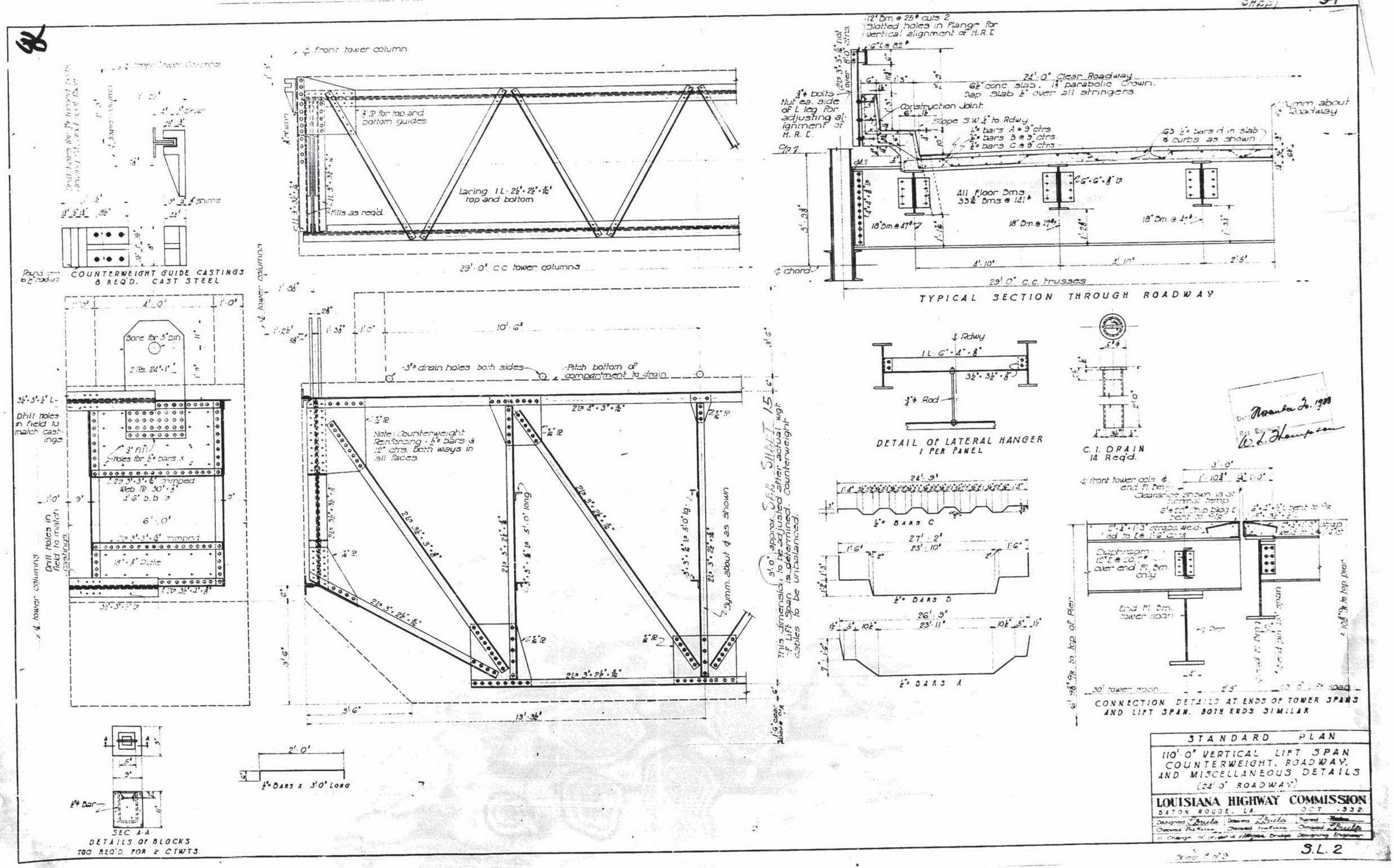

AS BUILT PLANS

37

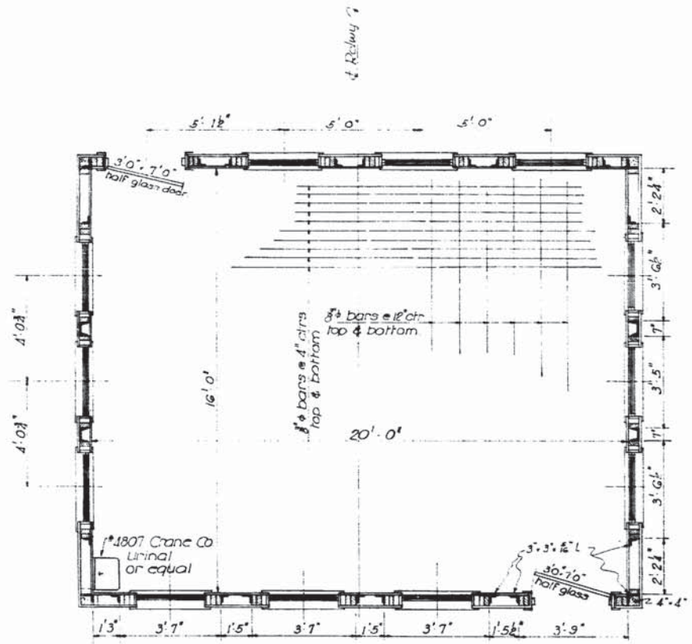

FLOOR PLAN

Note, all windows to be 2'-8" × 4'-2" - 2 Lt. D.H.

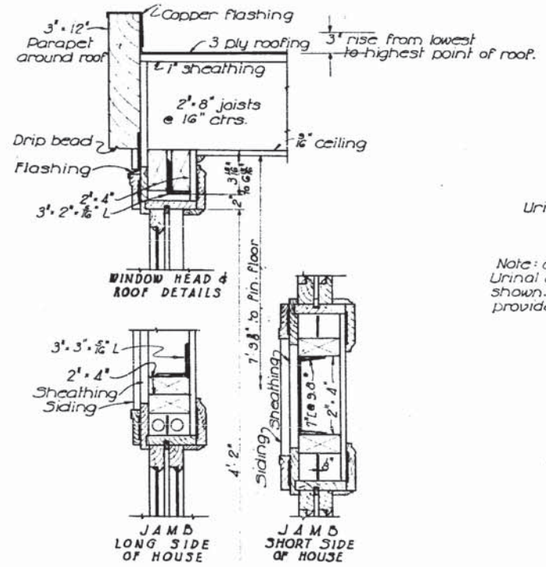

WINDOW HEAD & ROOF DETAILS

JAMB LONG SIDE OF HOUSE

JAMB SHORT SIDE OF HOUSE

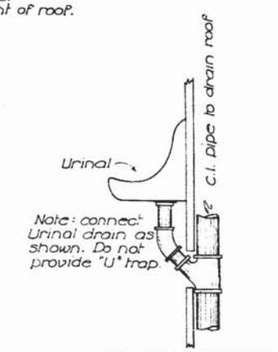

DETAIL SHOWING CONNECTION OF URINAL TO DRAIN

General Notes:
Timber framing shall be of heart cypress. All other lumber shall be Grade "B" Cypress. All timber 343. Studs to be spaced at not over 24" centres. 2"×4" Studs and plates to be bolted to structural steel members where they adjoin such members. Copper flashing to be used around roof on parapet and over doors and windows. Roof shall drain to one corner where a 4" C.I. pipe will carry water below low steel. Window and door glass shall be double strength American glass. Copper screens to be provided for windows and doors. Concrete floor slab to be Class AA conc covered with 4"×4" red floor tile. Urinal will drain into 4" C.I. roof drain. Roofing shall be Standard 3 ply built up roofing. Structural Steel, Reinforcing Steel and Class AA concrete shall be paid for as such. All other materials required to construct house complete shall be included in lump sum bid on operators house. House shall have three coats of paint as specified in Art. 81.30, Pamphlet "N" La. Highway Comm. Specifications. Urinal and 4" C.I. drain pipe to be included in lump sum bid for house.

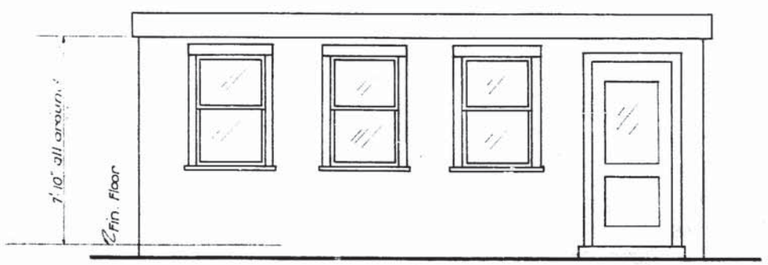

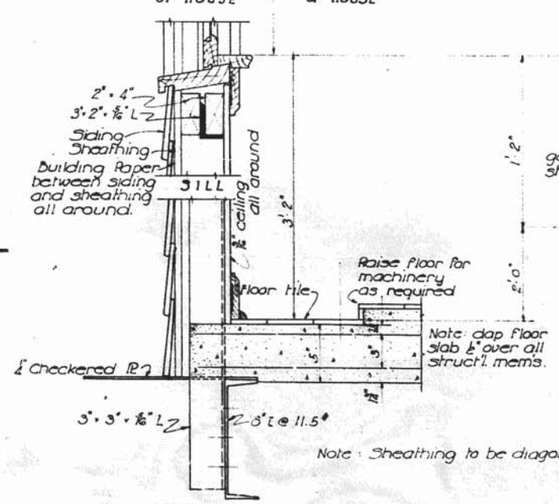

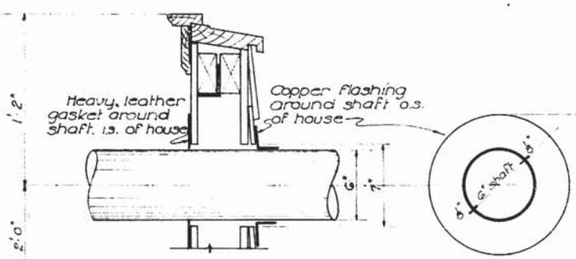

SECTION SHOWING HOLE IN WALL FOR DRIVE SHAFT.

FINAL QUANTITIES.

SUMMARY OF QUANTITIES

Class AA conc.	7.35 CU. YDS.
~~Struct'l Steel~~	~~[illegible] LBS.~~
Reinf. Steel	~~10.50 LBS.~~ 990 LBS.

NOTE:
FOR STRUCTURAL STEEL SEE MR. LANT'S LETTER - OCT. 10, 1933.
CL. "AA" CONC. AND REINF. STEEL SEE "AS BUILT" PLAN - SHEET NO. 16

November 20, 1933
W. L. Thompson

STANDARD PLAN
OPERATORS HOUSE
110'-0" VERTICAL LIFT SPAN
24'-0" ROADWAY

LOUISIANA HIGHWAY COMMISSION
BATON ROUGE, LA. OCT. 6, 1932

Designed Thatcher Computed Thatcher Traced Thatcher
Checked Fuller Computed Fuller Checked Fuller
In Charge of Design W. Wigfield Bridge Designing Engineer

Sheet 3 of 3

S-L-2

AS BUILT PLANS

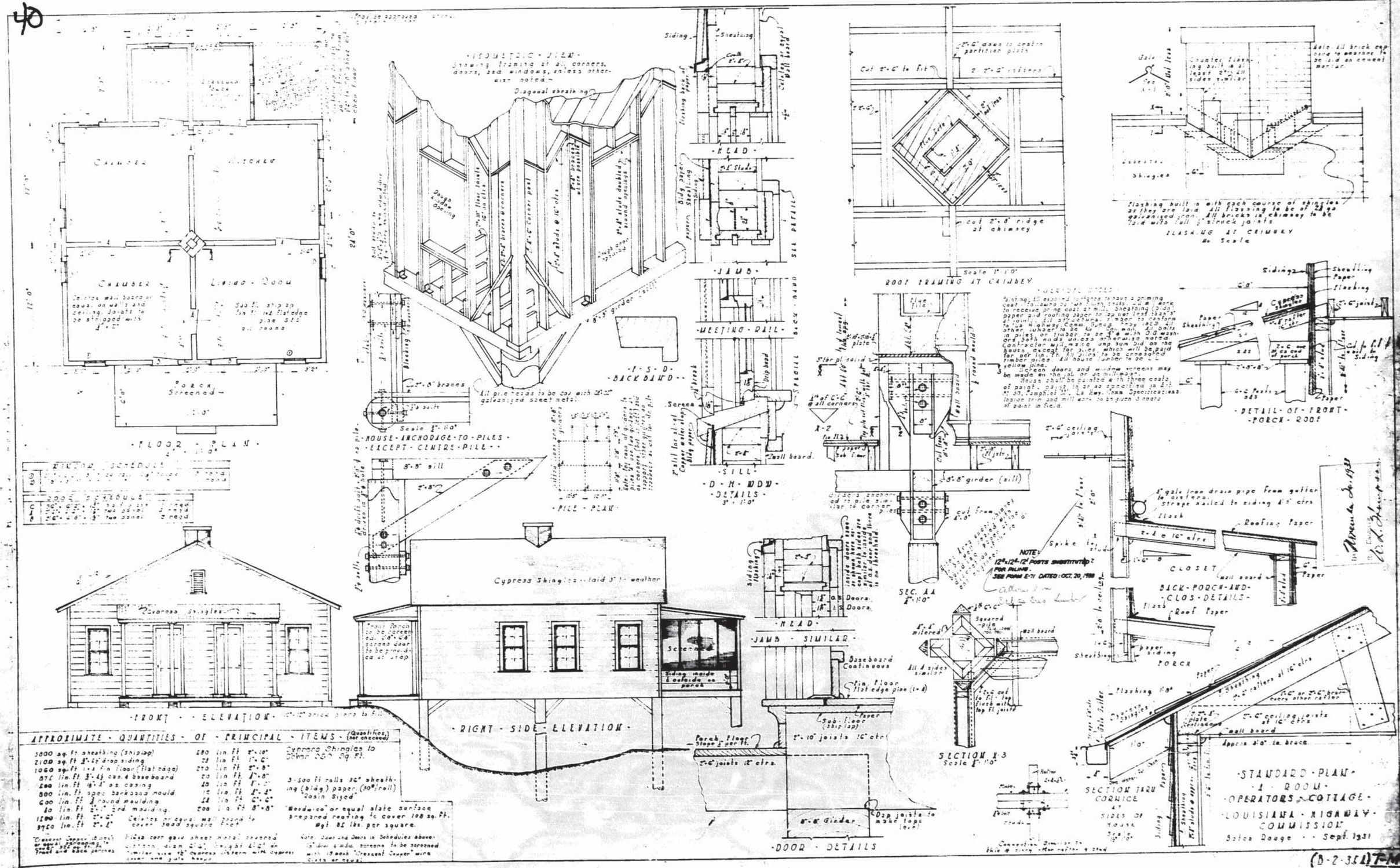

AS BUILT PLANS

50

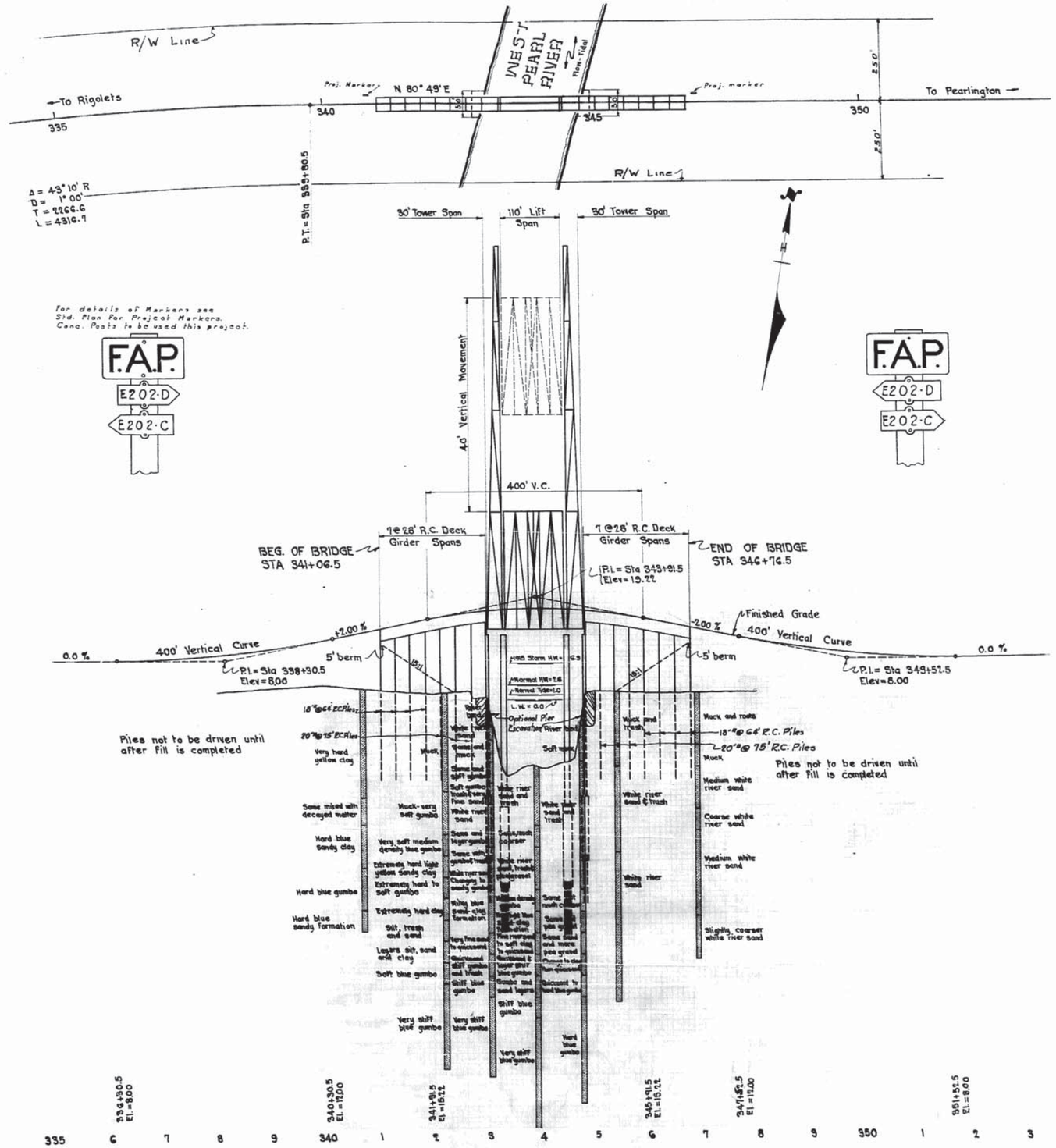

PLAN & PROFILE
WEST PEARL RIVER BRIDGE
RIGOLETS - PEARLINGTON HIGHWAY
ST. TAMMANY PARISH

LOUISIANA HIGHWAY COMMISSION
BATON ROUGE, LA. Oct 1932

Designed	Detailed	Traced
Checked	Checked	Checked
In Charge of	Bridge Designing Engineer	

FINAL TRACINGS

51

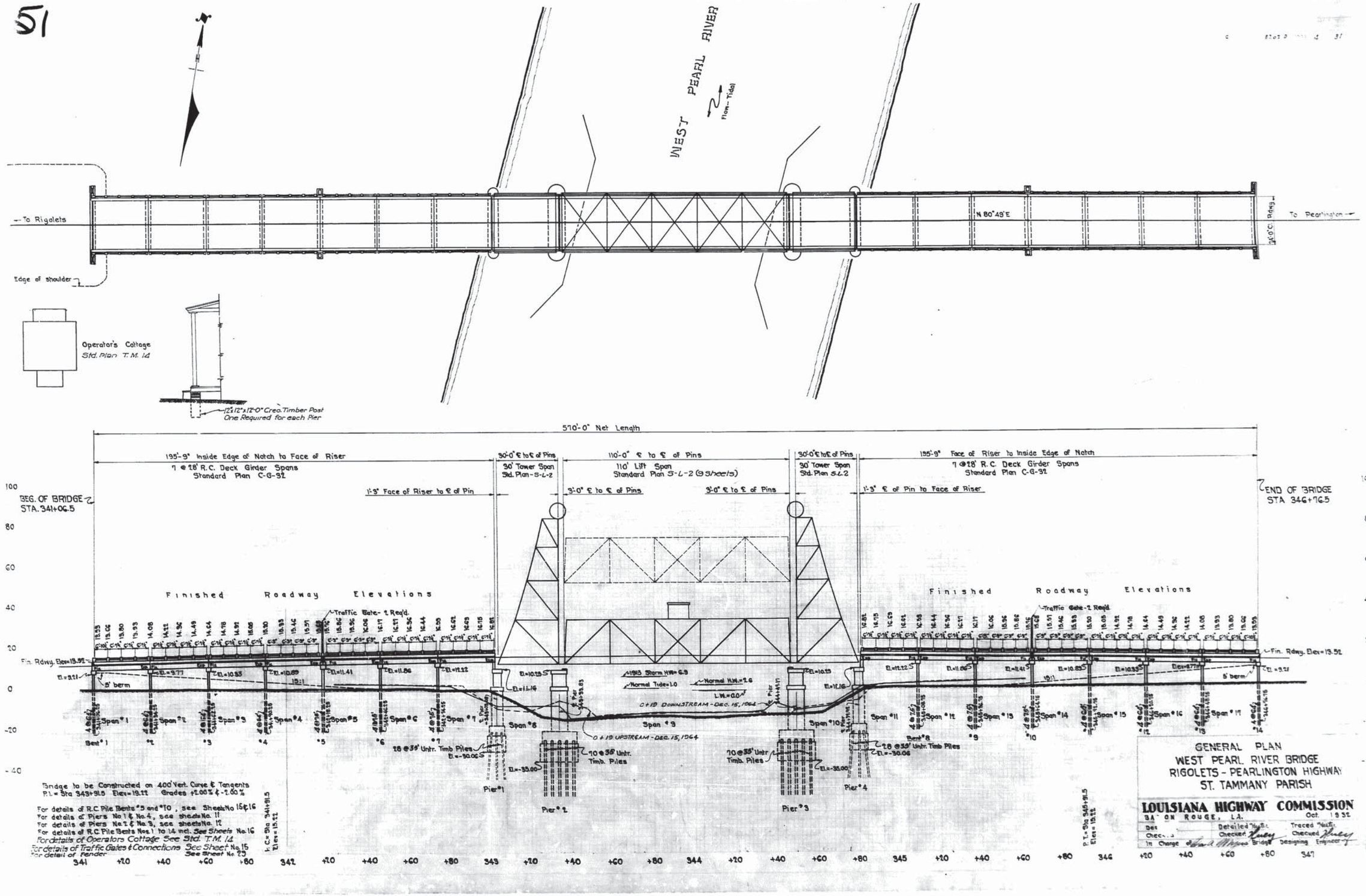

FINAL TRACINGS

HAER No. LA-31

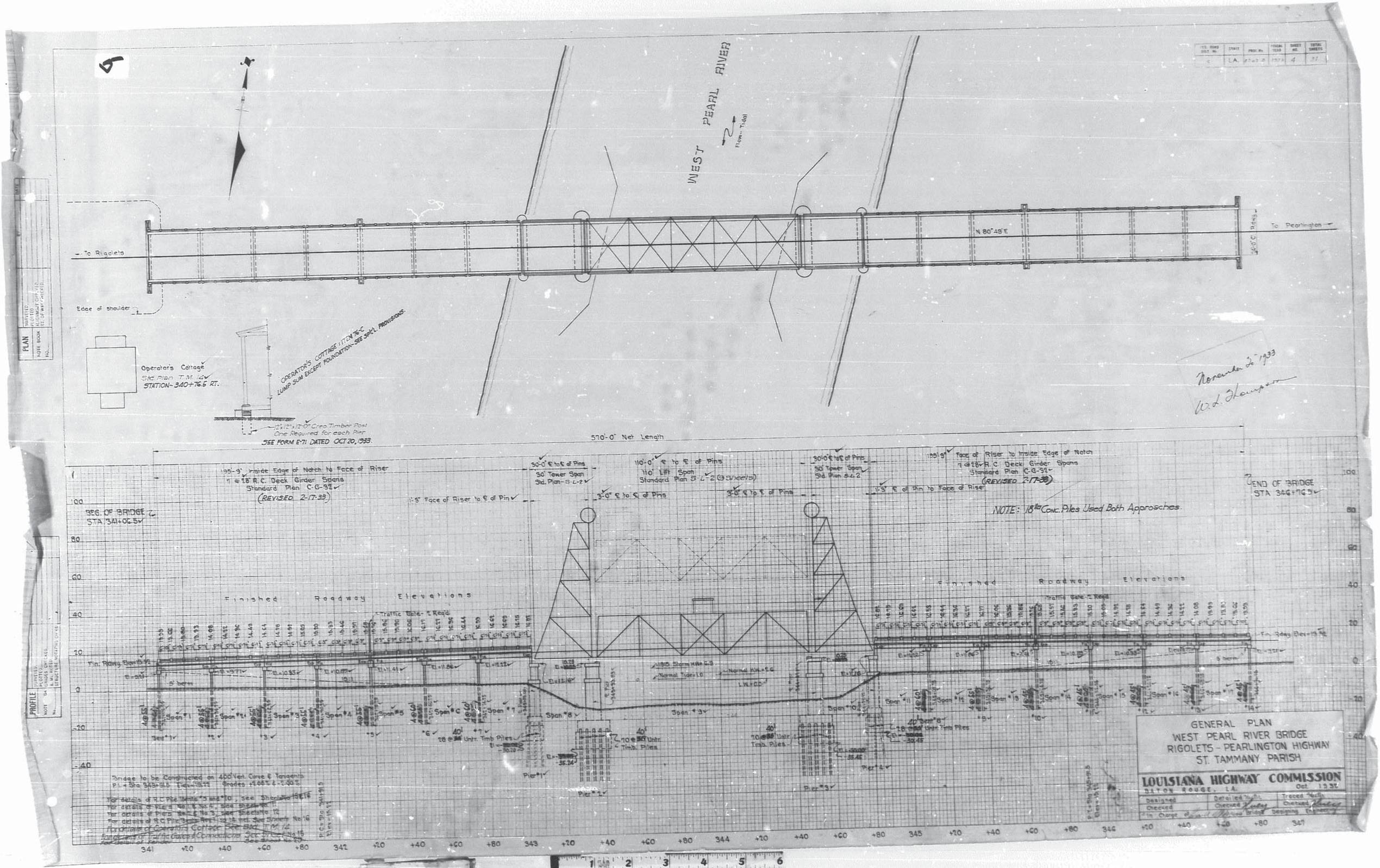
WEST PEARL RIVER
Flow - Tidal
To Rigolets
To Pearlington
N 80°-49' E
Edge of shoulder
Operator's Cottage
Std. Plan T.M. 12
STATION - 340+76.5 RT.
OPERATOR'S COTTAGE: 1 FEN 72-C
LUMP SUM EXCEPT FOUNDATION - SEE SPEC. PROVISIONS.
12"x12"x12'-0" Creo. Timber Post
One Required for each Pier
SEE FORM E-71 DATED OCT 20, 1933.
November 2, 1933
W. L. Thompson
510'-0" Net Length
195'-9" Inside Edge of Notch to Face of Riser
7 @ 18' R.C. Deck Girder Spans
Standard Plan C-G-32
(REVISED 2-17-33)
30'-0" ℄ to ℄ of Pins
30' Tower Span
Std. Plan S-L-2
110'-0" ℄ to ℄ of Pins
110' Lift Span
Standard Plan S-L-2 (9 sheets)
1'-3" Face of Riser to ℄ of Pin
3'-0" ℄ to ℄ of Pins
195'-9" Face of Riser to Inside Edge of Notch
7 @ 18' R.C. Deck Girder Spans
Standard Plan C-G-32
(REVISED 2-17-33)
1'-3" ℄ of Pin to Face of Riser
BEG. OF BRIDGE
STA. 341+06.5
END OF BRIDGE
STA. 346+76.5
NOTE: 18" Conc. Piles Used Both Approaches.
Finished Roadway Elevations
Traffic Gate - ℄ Road
Fin. Rdwy. Elev. 19.92
5' berm
Span #1
Span #2
Span #3
Span #4
Span #5
Span #6
Span #7
Span #8
Span #9
Span #10
Span #11
Span #12
Span #13
Span #14
Span #15
Span #16
Span #17
Span #18
Span #19
Span #20
Span #21
Span #22
Span #23
Span #24
Span #25
Span #26
Span #27
Span #28
Span #29
Span #30
Span #31
Span #32
Span #33
Span #34
Span #35
Span #36
Span #37
Span #38
Span #39
Span #40
Span #41
Span #42
Span #43
Span #44
Span #45
Span #46
Span #47
Span #48
Span #49
Span #50
Span #51
Span #52
Span #53
Span #54
Span #55
Span #56
Span #57
Span #58
Span #59
Span #60
Span #61
Span #62
Span #63
Span #64
Span #65
Span #66
Span #67
Span #68
Span #69
Span #70
Span #71
Span #72
Span #73
Span #74
Span #75
Span #76
Span #77
Span #78
Span #79
Span #80
Span #81
Span #82
Span #83
Span #84
Span #85
Span #86
Span #87
Span #88
Span #89
Span #90
Span #91
Span #92
Span #93
Span #94
Span #95
Span #96
Span #97
Span #98
Span #99
Span #100
Span #101
Span #102
Span #103
Span #104
Span #105
Span #106
Span #107
Span #108
Span #109
Span #110
Span #111
Span #112
Span #113
Span #114
Span #115
Span #116
Span #117
Span #118
Span #119
Span #120
Span #121
Span #122
Span #123
Span #124
Span #125
Span #126
Span #127
Span #128
Span #129
Span #130
Span #131
Span #132
Span #133
Span #134
Span #135
Span #136
Span #137
Span #138
Span #139
Span #140
Span #141
Span #142
Span #143
Span #144
Span #145
Span #146
Span #147
Span #148
Span #149
Span #150
Span #151
Span #152
Span #153
Span #154
Span #155
Span #156
Span #157
Span #158
Span #159
Span #160
Span #161
Span #162
Span #163
Span #164
Span #165
Span #166
Span #167
Span #168
Span #169
Span #170
Span #171
Span #172
Span #173
Span #174
Span #175
Span #176
Span #177
Span #178
Span #179
Span #180
Span #181
Span #182
Span #183
Span #184
Span #185
Span #186
Span #187
Span #188
Span #189
Span #190
Span #191
Span #192
Span #193
Span #194
Span #195
Span #196
Span #197
Span #198
Span #199
Span #200
Span #201
Span #202
Span #203
Span #204
Span #205
Span #206
Span #207
Span #208
Span #209
Span #210
Span #211
Span #212
Span #213
Span #214
Span #215
Span #216
Span #217
Span #218
Span #219
Span #220
Span #221
Span #222
Span #223
Span #224
Span #225
Span #226
Span #227
Span #228
Span #229
Span #230
Span #231
Span #232
Span #233
Span #234
Span #235
Span #236
Span #237
Span #238
Span #239
Span #240
Span #241
Span #242
Span #243
Span #244
Span #245
Span #246
Span #247
Span #248
Span #249
Span #250
Span #251
Span #252
Span #253
Span #254
Span #255
Span #256
Span #257
Span #258
Span #259
Span #260
Span #261
Span #262
Span #263
Span #264
Span #265
Span #266
Span #267
Span #268
Span #269
Span #270
Span #271
Span #272
Span #273
Span #274
Span #275
Span #276
Span #277
Span #278
Span #279
Span #280
Span #281
Span #282
Span #283
Span #284
Span #285
Span #286
Span #287
Span #288
Span #289
Span #290
Span #291
Span #292
Span #293
Span #294
Span #295
Span #296
Span #297
Span #298
Span #299
Span #300
Span #301
Span #302
Span #303
Span #304
Span #305
Span #306
Span #307
Span #308
Span #309
Span #310
Span #311
Span #312
Span #313
Span #314
Span #315
Span #316
Span #317
Span #318
Span #319
Span #320
Span #321
Span #322
Span #323
Span #324
Span #325
Span #326
Span #327
Span #328
Span #329
Span #330
Span #331
Span #332
Span #333
Span #334
Span #335
Span #336
Span #337
Span #338
Span #339
Span #340
Span #341
Span #342
Span #343
Span #344
Span #345
Span #346
Span #347
Pier #1
Pier #2
Pier #3
Pier #4
40' Sect. #8
10 @ 30' Untr. Timb. Piles
28 @ 30' Untr. Timb. Piles
Bridge to be Constructed on 400' Vert. Curve & Tangents
Grades: +0.08% & -0.00%
For details of R.C. Pile Bents #5 and #10, see Sheet No. 13
For details of Pier #1, see Sheet No. 11
For details of Piers #2 & #3, see Sheet No. 12
For details of R.C. Pile Bents #1 to 16 incl. See Sheets No. 16
For details of Operator's Cottage, See Std. T.M. 12
For details of Fall Gate & Connections, See Sheet No. 15
For details of Fender, See Sheet No. 29
GENERAL PLAN
WEST PEARL RIVER BRIDGE
RIGOLETS - PEARLINGTON HIGHWAY
ST. TAMMANY PARISH
LOUISIANA HIGHWAY COMMISSION
BATON ROUGE, LA.
Oct. 1933
Designed
Checked
In Charge of Design
Detailed
Checked
Traced
Checked
Designing Engineer
AS BUILT PLANS

HAER No. LA-31