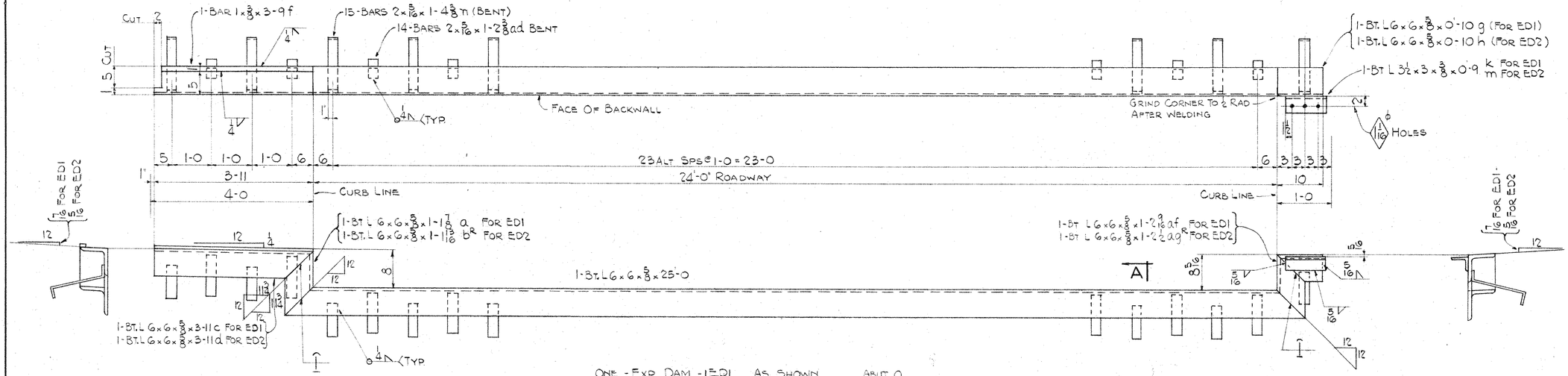

ONE - EXP. DAM - 1ED1 AS SHOWN ABUT. 0
ONE - EXP. DAM - 1ED2 OPP. HAND ABUT. 12

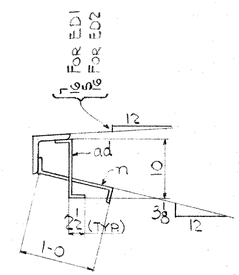

SECTION "A"

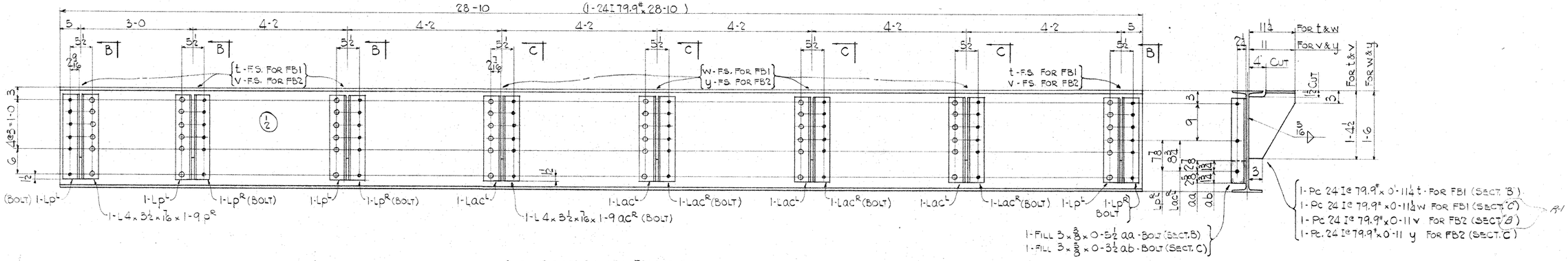

ONE - FLOOR BEAM - 1FB1 AS SHOWN
2 - " " - 1FB2 OPP. HAND

SECTION "B" do "C"

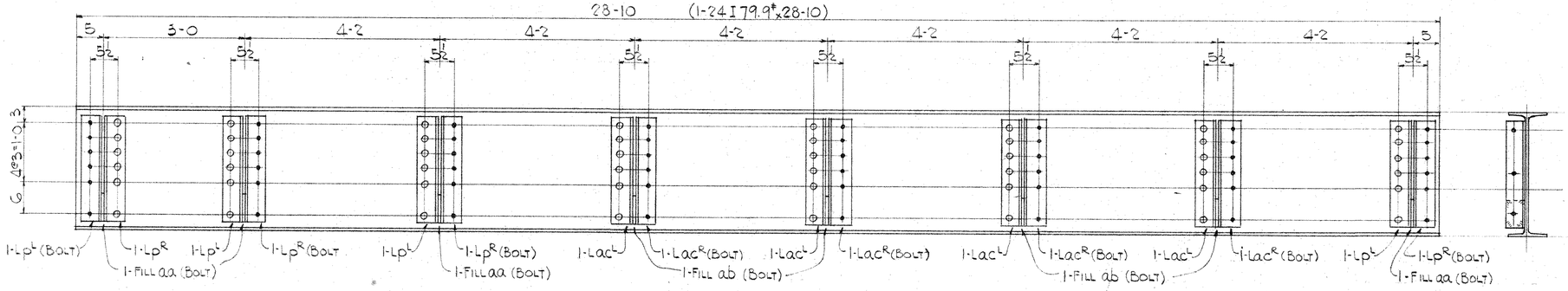

ONE - FLOOR BEAM - 1FB3

PENNA. DEPT. OF HWYS.
APPROVED AS TO DESIGN
SEP 3 - 1958
ENGINEER OF BRIDGES

COMMONWEALTH OF PENNSYLVANIA
DEPARTMENT OF HIGHWAYS
BRIDGE UNIT
LR. 04017-4 BEAVER COUNTY
RECONSTRUCTION OF ELLWOOD - KOPPEL BRIDGE OVER BEAVER RIVER

FERGUSON & EDMONDSON CO.
ENGINEERS & CONSTRUCTORS
PITTSBURGH, PA.

RIVETS 13/8 @
OPEN HOLES 15/8 @ U.N
SHOP PAINT

E.E.Co. MADE R.H.L. SHEET NO. 1
CHKD. RAW CONTRACT NO. B1193
DATE 5/14/57

NO.	DATE	DESCRIPTION OF REVISION
1	7/1/57	Changed note Sect 'B' & 'C'

RD-8

ARKA-TEX WHITE PENCIL CLOTH™ B. K. ELLIOTT CO., PGH., PA.

1-L8×4×¾×26'-10 15/16"

CUT L

1½

3'-7"

4½

2 15/16

3'-9 5/16

4" 4"

1-Pl "b"

3'-9 5/8

3'-9 7/16

3'-9 5/8

3'-9 5/16

3'-9 6/16

3'-9 6/16

NOTCH L

1'-6"

D

F

1 Pl 6¾×⅝×1'-4 11/16 (Grind to Fit) "b"

1-Pl 5×¾×27'-0¾ c

1-18"[45.8#×30'-8⅛

30'-6⅝

SECT. "D"

20°-21'-12"

12

4 7/16

1 5/8

3'-6 7/16

1'-5 11/16

1'-5 5/16

1'-6"

1'-6"

1'-5 5/16

1'-6

1'-6

1'-5 5/16

1'-6

1'-6

1'-5 5/16

1'-6

1'-6

1'-5 5/16

1'-4 9/16

4 7/16

SECTION "A-A"

5/16 2 3/8

TYP. FOR ED4

2 11/16

1 Pl 10½ abt.×1×26'-11 7/8 ED4 {See Note "A"

2 11/16

2 11/16

2 11/16

2 11/16

2 11/16

2 11/16

2 11/16

2 13/16 (abt.)

1½ 2 11/16 1/4

END 1 Pl 8×4×¾ L

1 Pl g

1 Pl f

1-Pl f

1 Pl g

1 Pl f

2 3/4

A

8½

7½

A

1/4

5/16

AT TEETH

1 Pl 4×¾×1'-5" d

1 Pl 4×¾×1'-4⅞ f

1 Pl 4×¾×1'-5 5/16 g

1 Pl g

1 Pl f

R=⅜"

R=1⅛"

TYP.

1 Pl g

1 Pl f

9¼

8½

1/4

B

CUT TOP & BOTT. FIGS.

3¼

3¼

1 Pl 13¼ abt.×1×26'-10" ED3 {See Note A

3¼

3¼

3¼

3¼

1 Pl 4×¾×1'-3 13/16 k

3¾

3¾

B

15/16

3"

CURB

52@3"=13'-0

52@3"=13'-0

3

4½

3'-4½

3'-8 13/16

3'-6

4'-5 5/16

4'-2"

4'-2"

4@4'-5 5/16"=17'-9¼

26'-7 15/16

30'-4¾

4'-2"

4'-2"

4'-5⅜

4'-2"

3

4½

12

7½

(WELDED BEADS ⅛ CR. × ⅛ WIDE, ⅛ MIN. HGT. PATTERN TYPICAL FULL LENGTH OF EXPANSION PLATE

1 Pl 3½×½×1'-4⅞ a

Grind to Fit

1-Pl "a"

1-18"[45.8#, 30'-9 3/16"

1-Pl "a"

1-Pl "a"

1-Pl "a"

1-Pl "a"

1-Pl "a"

1'-6

3'-7¾

2'-2 11/16

2'-2 5/8

2'-2 11/16

2'-2 5/8

2'-2 11/16

2'-2 5/8

30'-7 11/16

2'-2 11/16

2'-2 5/8

2'-2 11/16

2'-2 5/8

2'-2 3/8

2'-2 5/8

4"

VIEW "B-B"

2 3/8

12

4 7/16

1¼

5½

& STRINGER & END OF 5×¾ Pl

SECTION "F"

ED3

ED4

d, f, g, k

5/16

TYP. 5/16

"a"

"b"

(AT TEETH)

4"

15/16

1'-6"

c

5"

½"

NORMAL

8¾

7½

5/16 TYP.

SECTION "C"

ONE - EXPANSION DIAM - 2ED3

ONE - do do - 2ED4

NOTE "A": MAKE BOTH TOOTH PLATES ED3 & ED4 FROM 1-Pl 18×1×27'-4"

PENNA. DEPT. OF HWYS.
APPROVED AS TO DESIGN
SEP 3 - 1958
ENGINEER OF BRIDGES

COMMONWEALTH OF PENNSYLVANIA
DEPARTMENT OF HIGHWAYS
BRIDGE UNIT
L.R. 04017-4 BEAVER COUNTY
RECONSTRUCTION OF
ELLWOOD-KOPPEL BRIDGE
OVER BEAVER RIVER

FERGUSON & EDMONDSON CO.
ENGINEERS & CONSTRUCTORS
PITTSBURGH, PA.

RIVETS NONE
OPEN HOLES NONE
SHOP PAINT

E & E Co.
MADE RAW
CHKD. RHL
DATE

SHEET NO. 2
CONTRACT NO. B1193

NO. | DATE | DESCRIPTION OF REVISION

RD-8

ARK-A-TEX WHITE PENCIL CLOTH — R. K. ELLIOTT CO., PGH., PA.

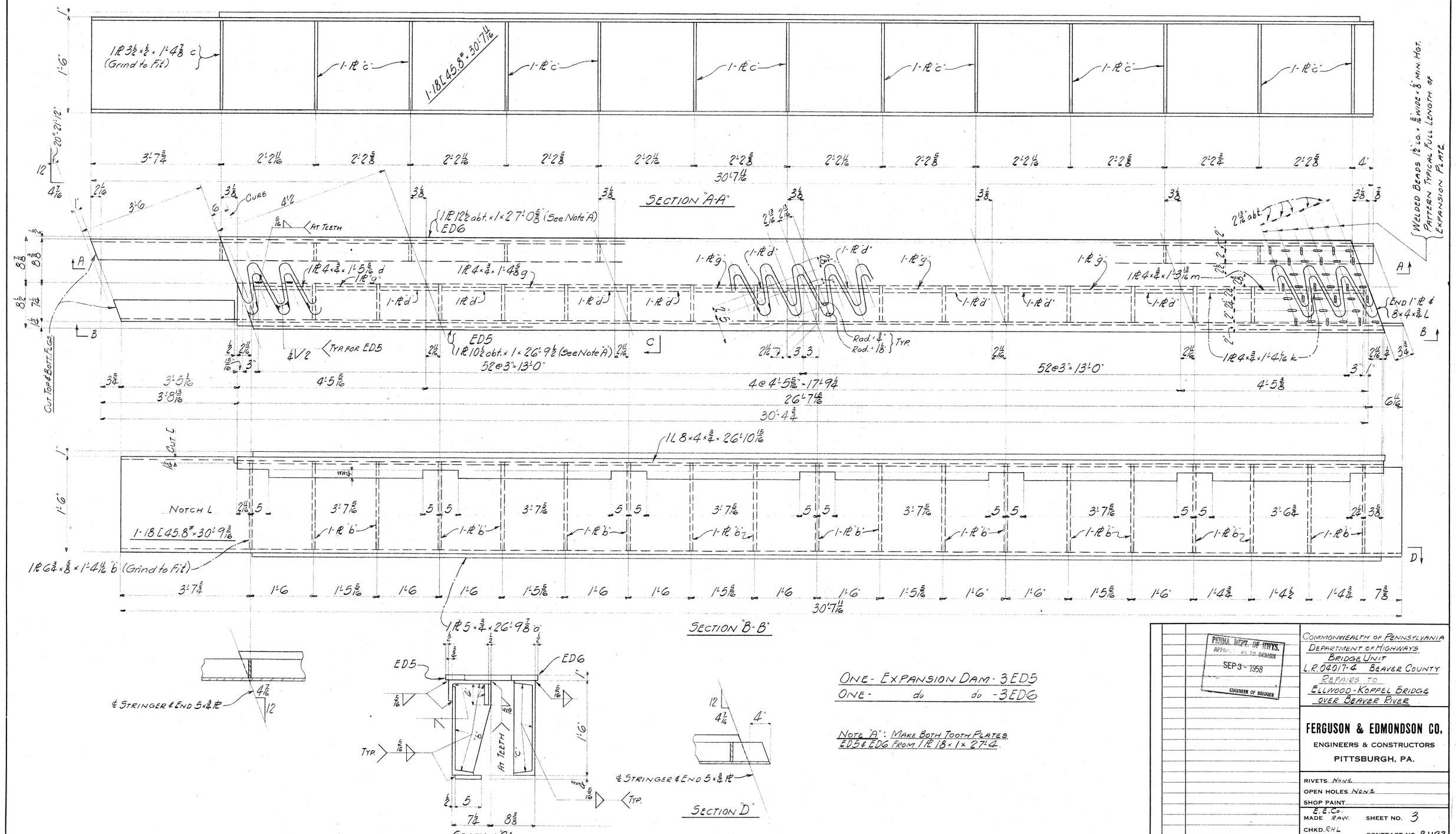

ONE - EXPANSION DAM - 3 ED5
ONE - do do - 3 ED6

NOTE "A": MAKE BOTH TOOTH PLATES ED5 & ED6 FROM 1 PL 18 × 1 × 27'-4.

PENNA. DEPT. OF HWYS.
APPROVED AS TO DESIGN
SEP 3 - 1958
ENGINEER OF BRIDGES

COMMONWEALTH OF PENNSYLVANIA
DEPARTMENT OF HIGHWAYS
BRIDGE UNIT
L.R. 04017-4 BEAVER COUNTY
REPAIRS TO
ELLWOOD-KOPPEL BRIDGE
OVER BEAVER RIVER

FERGUSON & EDMONDSON CO.
ENGINEERS & CONSTRUCTORS
PITTSBURGH, PA.

RIVETS NONE
OPEN HOLES NONE
SHOP PAINT
MADE E.E.Co. RAW.
CHKD. RHL
DATE
SHEET NO. 3
CONTRACT NO. B1193

NO.	DATE	DESCRIPTION OF REVISION

RD-8

ARK-A-TEX WHITE PENCIL CLOTH—B. K. ELLIOTT CO., PGH., PA.

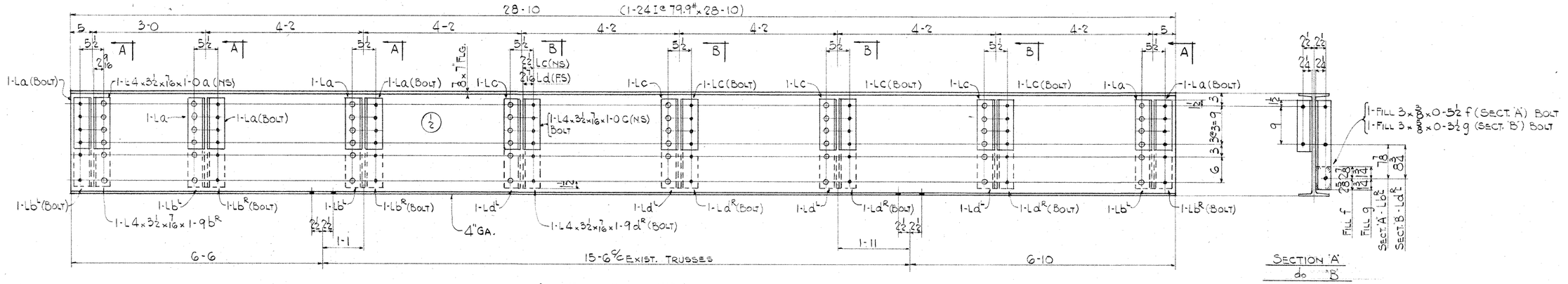

One-Floor Beam 4FB4

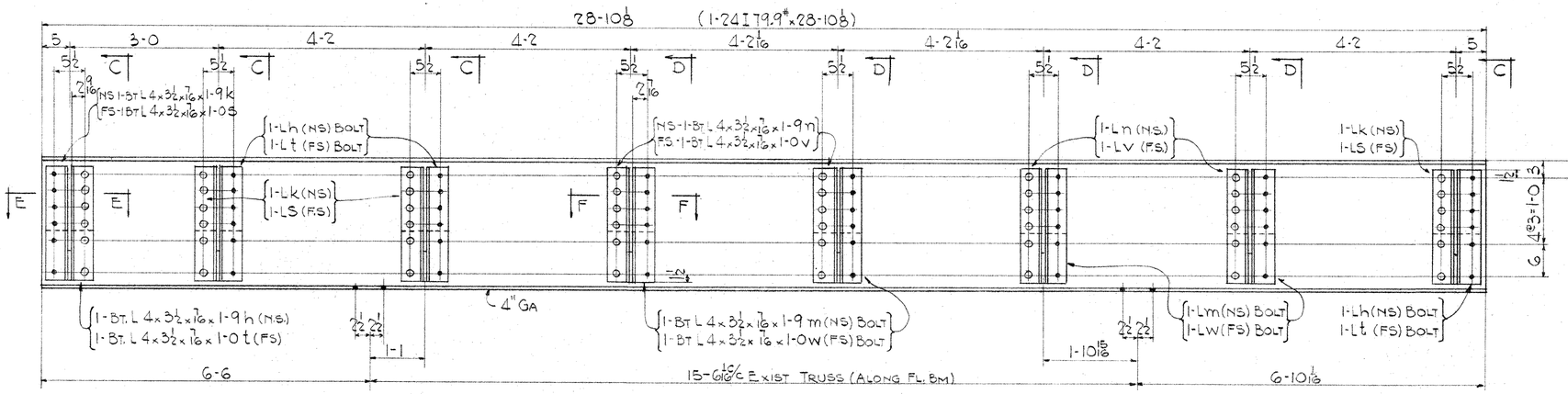

One-Floor Beam 4FB5

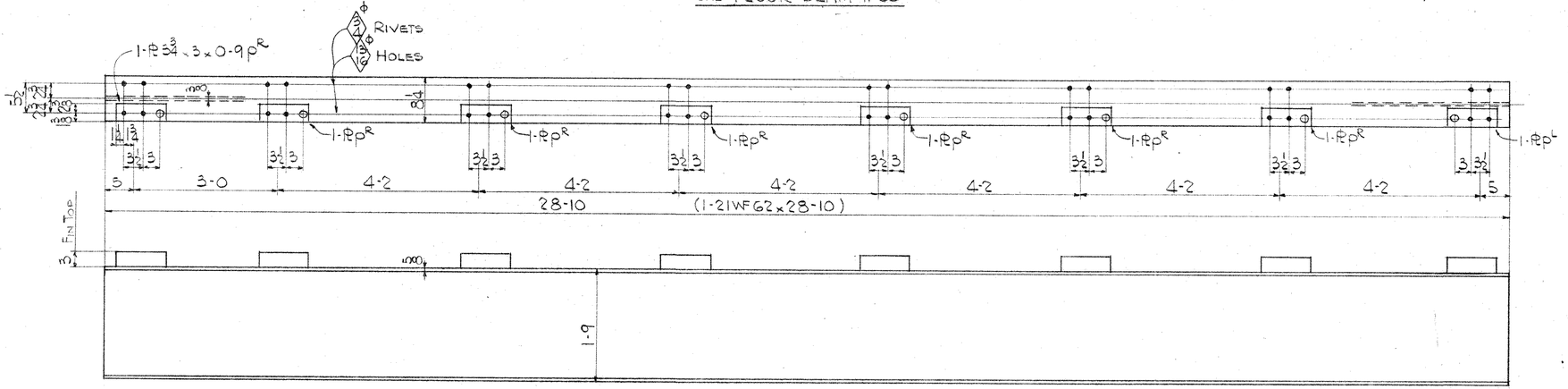

One-Floor Beam 4FB6

PENNA. DEPT. OF HWYS. APPROVED ... DESIGN SEP 3 - 1958 ENGINEER OF BRIDGES

COMMONWEALTH OF PENNSYLVANIA
DEPARTMENT OF HIGHWAYS
BRIDGE UNIT
LR 04017-4 BEAVER COUNTY
RECONSTRUCTION OF
ELLWOOD KOPPEL BRIDGE
OVER BEAVER RIVER

FERGUSON & EDMONDSON CO.
ENGINEERS & CONSTRUCTORS
PITTSBURGH, PA.

RIVETS 8⌀
OPEN HOLES 15/16⌀ UN
SHOP PAINT

E.E.Co. MADE RHL
CHKD. RAW
DATE 5/14/57

SHEET NO. 4
CONTRACT NO. B1193

NO. | DATE | DESCRIPTION OF REVISION

RD-8

ARK-A-TEX WHITE PENCIL CLOTH — D. K. ELLIOTT CO., PGH., PA.

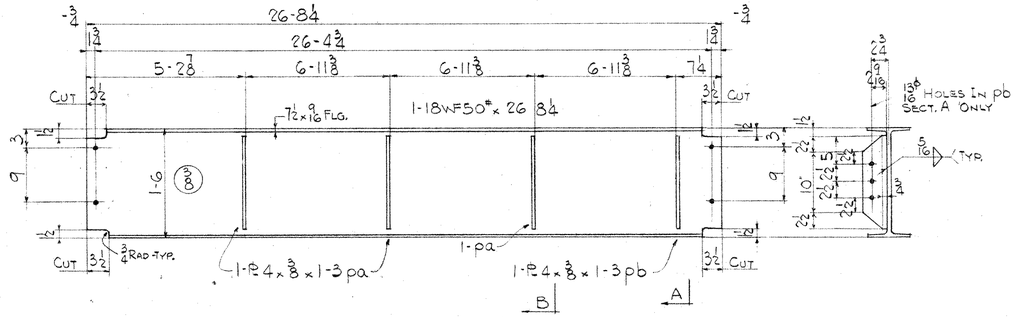

ONE - STRINGER 5S1 R
ONE - STRINGER 5S1 L LEFT

SECTION A
" B

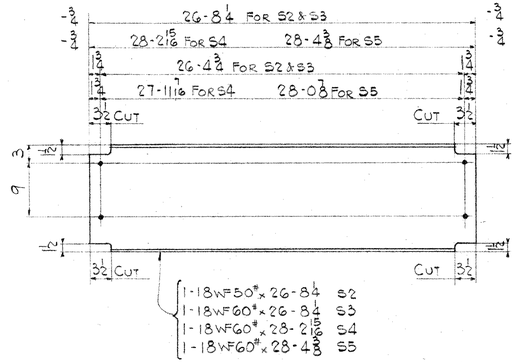

2- STRINGERS - 5S2
2- " 5S3

ONE - STRINGER - 5S4
ONE - " 5S5

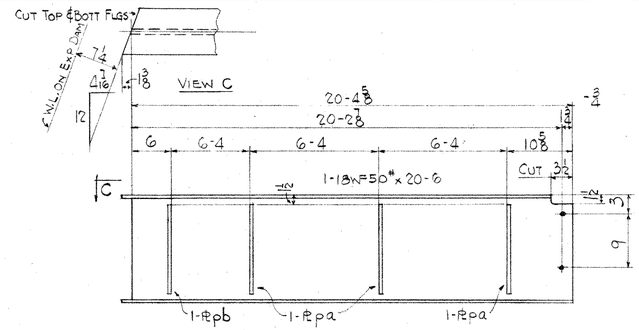

ONE - STRINGER 5S9

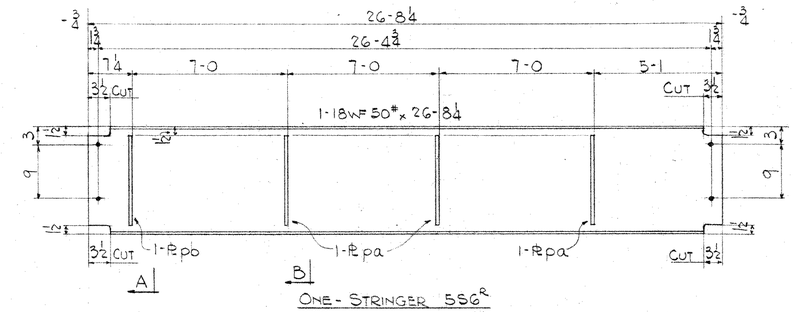

ONE - STRINGER 5S6 R
ONE - " 5S6 L LEFT

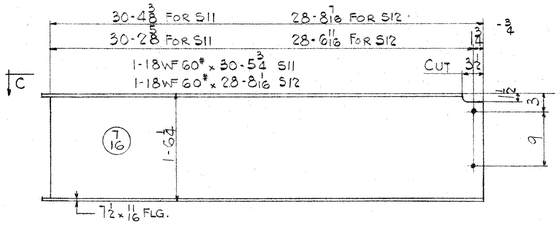

ONE - STRINGER 5S11
ONE - " 5S12

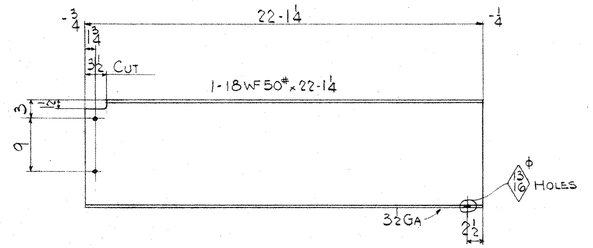

2 - STRINGER - 5S14

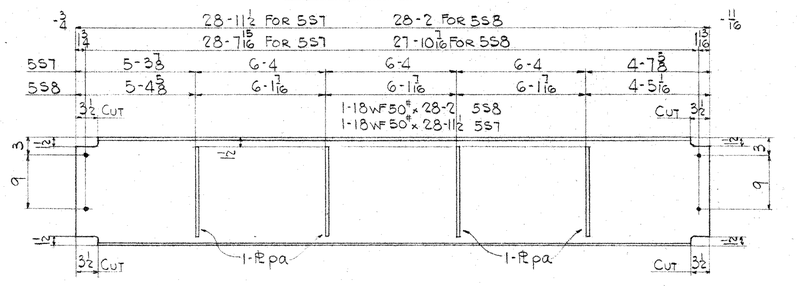

ONE - STRINGER 5S7
ONE - " 5S8 LEFT

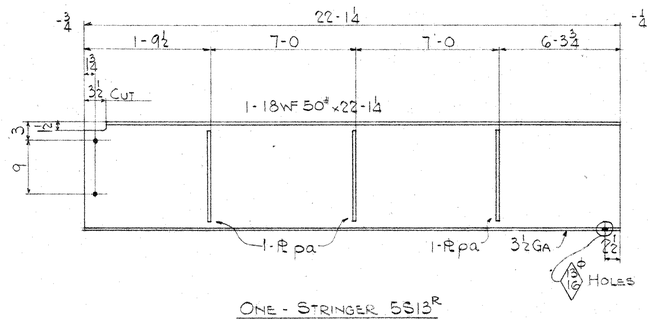

ONE - STRINGER 5S13 R
ONE - " 5S13 L LEFT

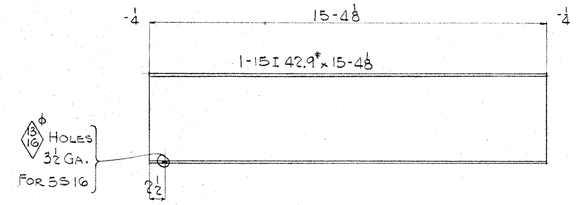

2 - STRINGERS 5S16
6 " 5S17

NOTE - MILL CAMBER TO BE TURNED UP

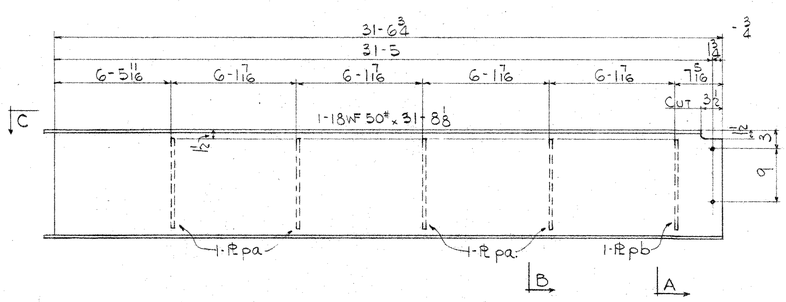

ONE - STRINGER - 5S10

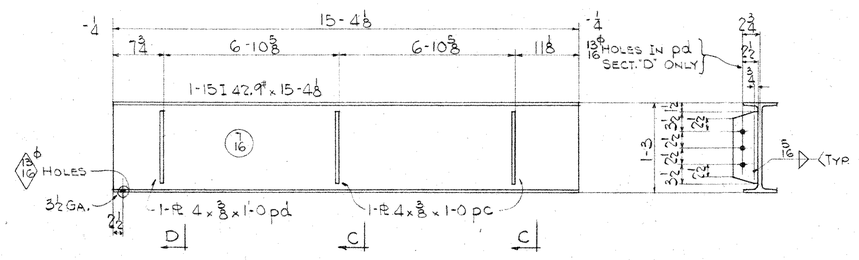

ONE - STRINGER 5S15 R
ONE - " 5S15 L LEFT

SECTION C
" D

PENNA. DEPT. OF HWYS.
APPROVED AS TO DESIGN
SEP 3 - 1958
ENGINEER OF BRIDGES

COMMONWEALTH OF PENNSYLVANIA
DEPARTMENT OF HIGHWAYS
BRIDGE UNIT
LR 04017-4 BEAVER COUNTY
RECONSTRUCTION OF ELLWOOD KOPPEL BRIDGE OVER BEAVER RIVER

FERGUSON & EDMONDSON CO.
ENGINEERS & CONSTRUCTORS
PITTSBURGH, PA.

RIVETS
OPEN HOLES 15/16ϕ HOLES - EXCEPT AS NOTED
SHOP PAINT

E.E.Co. MADE R.H.L. SHEET NO. 5
CHKD. RAW
DATE 5/14/57 CONTRACT NO. B1193

NO.	DATE	DESCRIPTION OF REVISION

RD-8

ARK-A-TEX WHITE PENCIL CLOTH™ - H. K. ELLIOTT CO., PGH., PA.

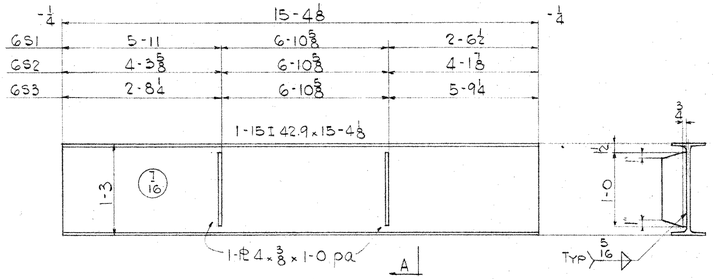

2- STRINGERS G51
2- " G52
2- " G53

SECTION "A"

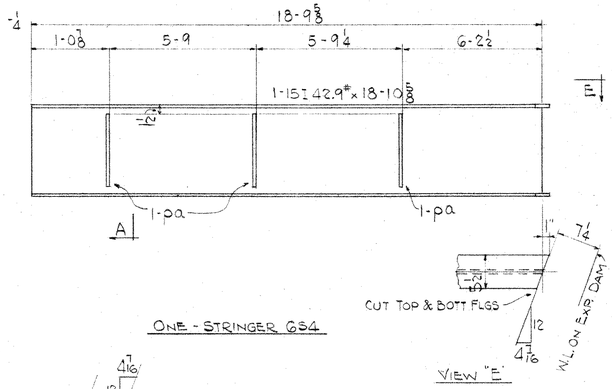

ONE - STRINGER G54

VIEW "E"

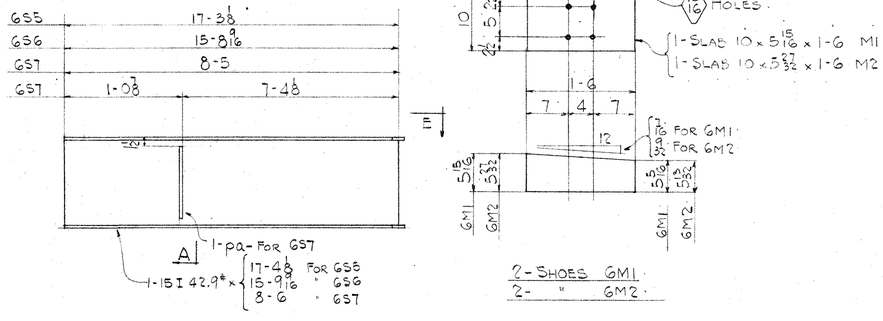

ONE - STRINGER G55
ONE - " G56
ONE - " G57

2 - SHOES GM1
2 - " GM2

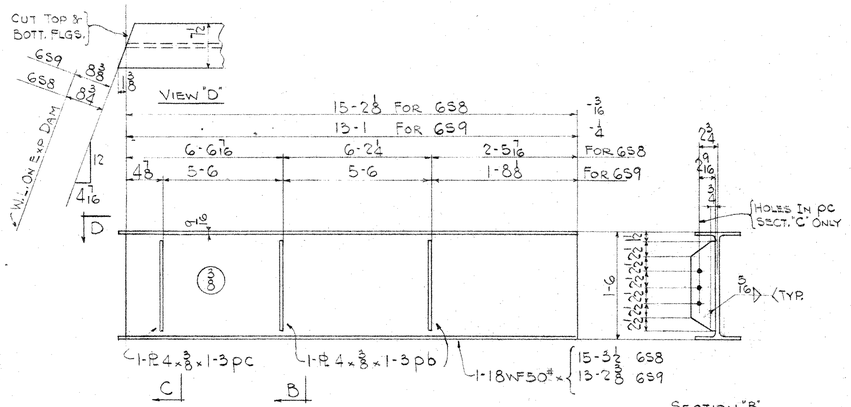

ONE - STRINGER G58
ONE - " G59

SECTION "B"
SECTION "C"

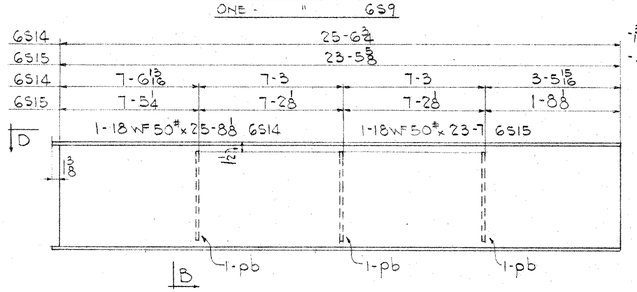

ONE - STRINGER - G514
ONE - " G515

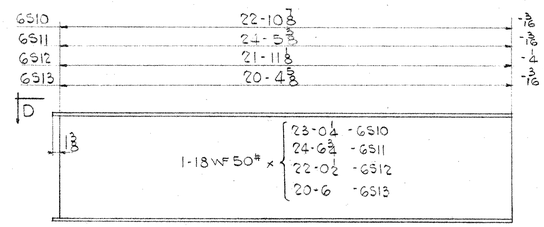

ONE - STRINGER G510
ONE - " G511

ONE - STRINGER G512
ONE - " G513

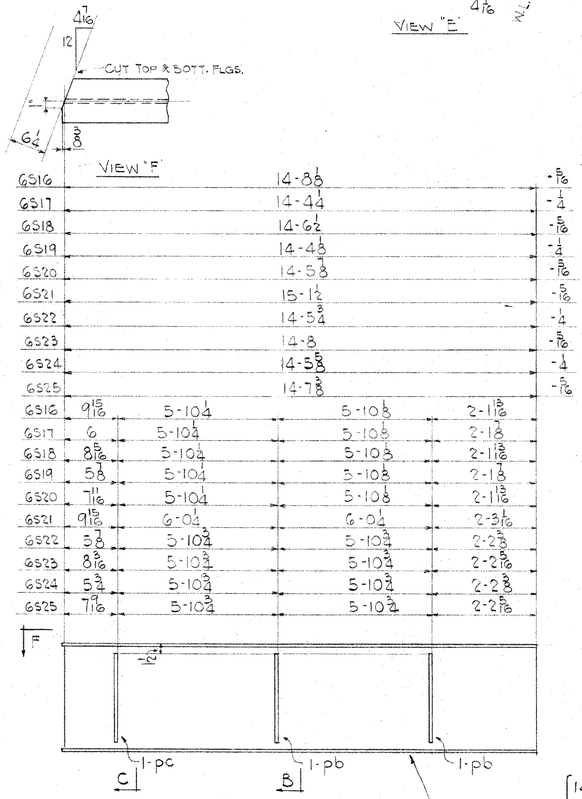

ONE - STRINGER G516
ONE - " G517
ONE - " G518
ONE - " G519
ONE - " G520
ONE - " G521
ONE - " G522
ONE - " G523
ONE - " G524
ONE - " G525

NOTE - MILL CAMBER TO BE TURNED UP.

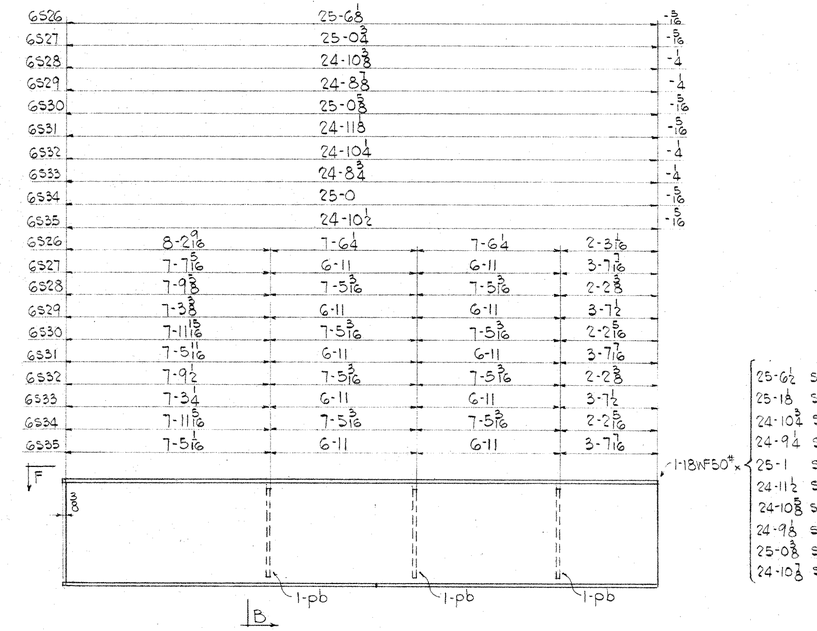

ONE - STRINGER G526
ONE - " G527
ONE - " G528
ONE - " G529
ONE - " G530
ONE - " G531
ONE - " G532
ONE - " G533
ONE - " G534
ONE - " G535

PENNA. DEPT. OF HWYS.
APPROVED AS TO DESIGN
SEP 3 - 1958
ENGINEER OF BRIDGES

COMMONWEALTH OF PENNSYLVANIA
DEPARTMENT OF HIGHWAYS
BRIDGE UNIT
LR 04017-4 BEAVER COUNTY
RECONSTRUCTION OF
ELLWOOD KOPPEL BRIDGE
OVER BEAVER RIVER

FERGUSON & EDMONDSON CO.
ENGINEERS & CONSTRUCTORS
PITTSBURGH, PA.

RIVETS —
OPEN HOLES 13/16 Φ
SHOP PAINT

E.E.Co. MADE RHL
CHKD. RAW
DATE 5/14/57

SHEET NO. 6
CONTRACT NO. B1193

NO.	DATE	DESCRIPTION OF REVISION

RD-8

ARK-A-TEX WHITE PENCIL CLOTH—D. K. ELLIOTT CO., PGH., PA.

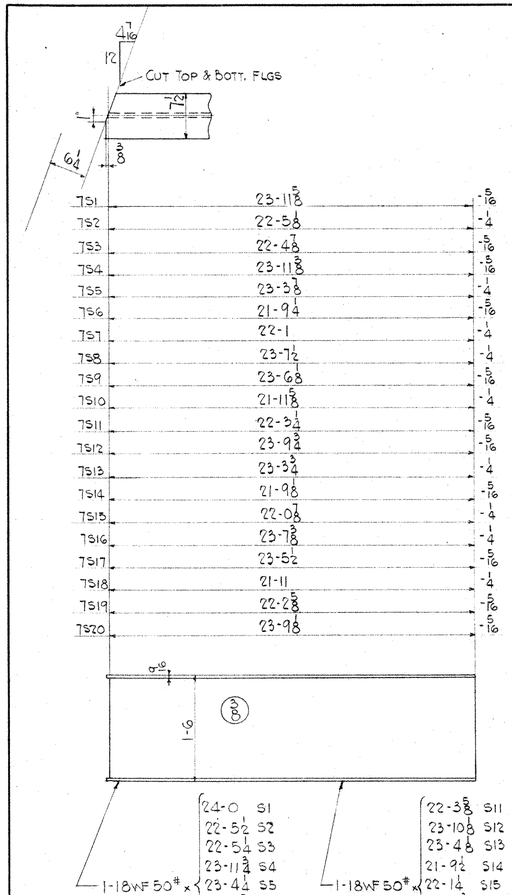

ONE - STRINGER - 7S1	
ONE - "	7S2
ONE - "	7S3
ONE - "	7S4
ONE - "	7S5
ONE - "	7S6
ONE - "	7S7
ONE - "	7S8
ONE - "	7S9
ONE - "	7S10

ONE - STRINGER - 7S11	
ONE "	7S12
ONE "	7S13
ONE "	7S14
ONE "	7S15
ONE "	7S16
ONE "	7S17
ONE "	7S18
ONE "	7S19
ONE "	7S20

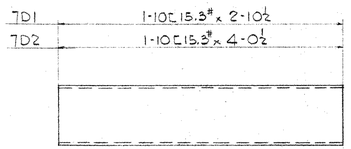

158 - DIAPHRAGMS 7D1
159 - " 7D2

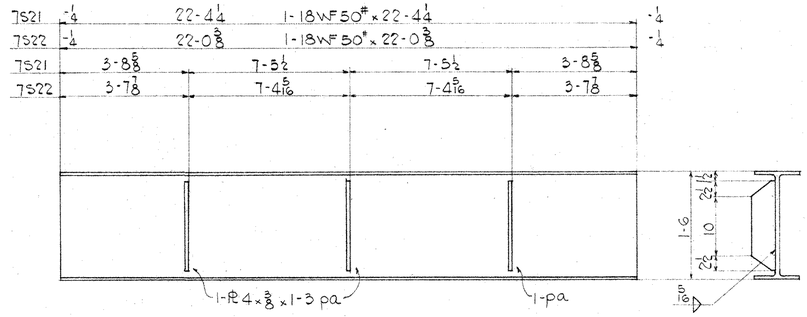

8 - STRINGER - 7S21 R	
8 - " - 7S21 L	LEFT
26 - " - 7S22 R	
26 - " - 7S22 L	LEFT

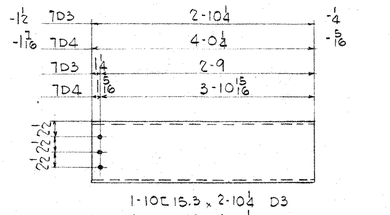

8 - DIAPHRAGMS 7D3 R	
2 - "	7D3 L LEFT
8 - "	7D4 R
ONE - "	7D4 L LEFT

5 - SIDEWALK EXP DAMS 7ED3
PIERS 5, 6, 7, 8, & 9

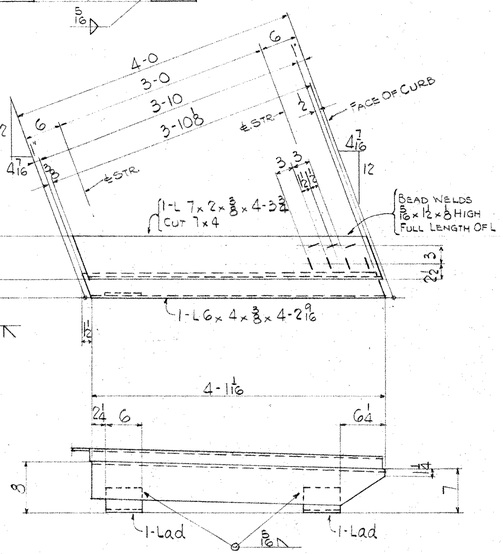

2 - SIDEWALK EXP DAMS - 7ED1 (PIERS 4 & 10)

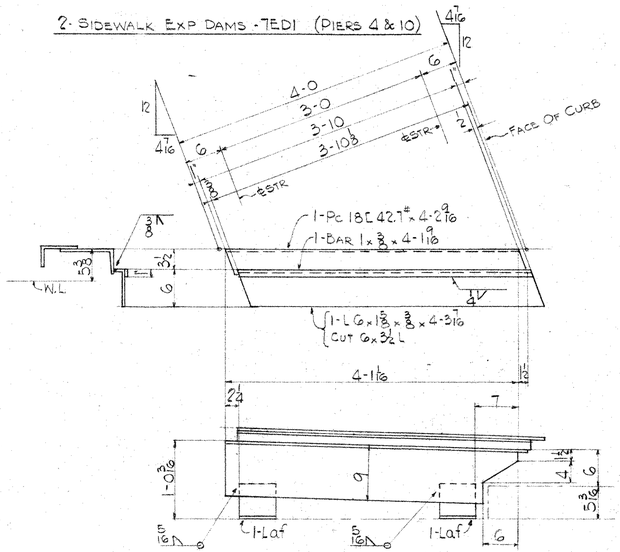

5 - SIDEWALK EXP DAMS 7ED4
PIERS 5, 6, 7, 8 & 9

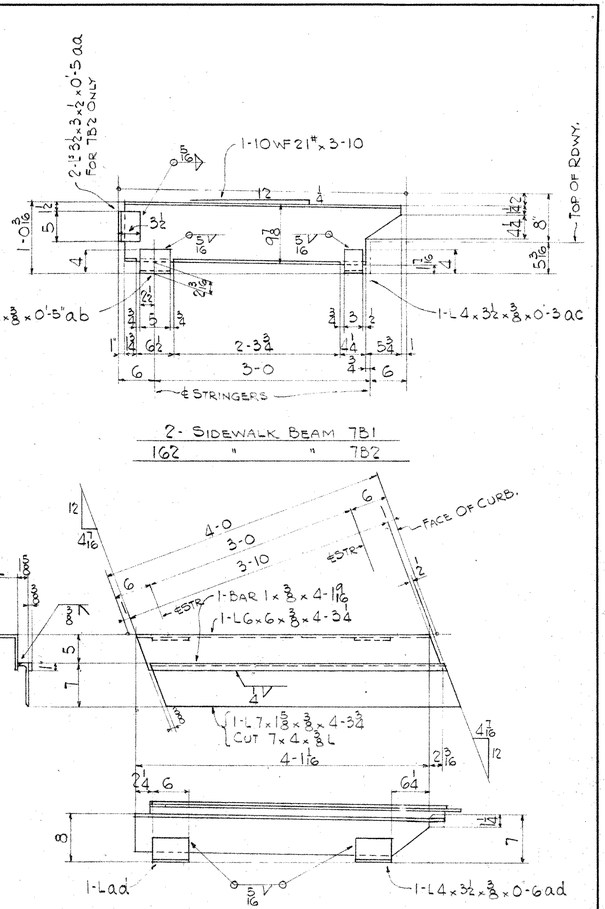

2 - SIDEWALK BEAM 7B1
162 " " 7B2

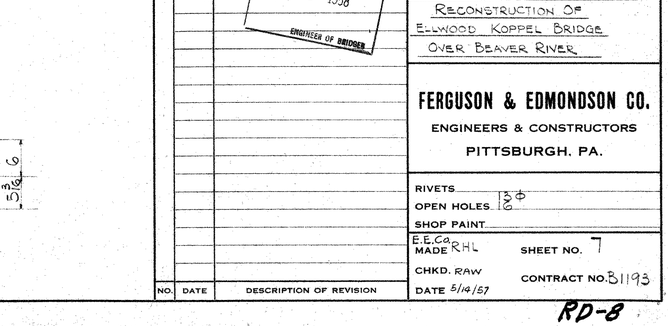

2 - SIDEWALK EXP DAMS 7ED2 (PIERS 4 & 10)

NOTE - MILL CAMBER TO BE TURNED UP

PENNA. DEPT. OF HWYS. APPROVED AS TO DESIGN SEP 3 - 1958 ENGINEER OF BRIDGES

COMMONWEALTH OF PENNSYLVANIA.
DEPARTMENT OF HIGHWAYS
BRIDGE UNIT
LR 04017-4 BEAVER COUNTY
RECONSTRUCTION OF
ELLWOOD KOPPEL BRIDGE
OVER BEAVER RIVER

FERGUSON & EDMONDSON CO.
ENGINEERS & CONSTRUCTORS
PITTSBURGH, PA.

RIVETS
OPEN HOLES. 13/16 ϕ
SHOP PAINT

E.E.Co. MADE RHL
CHKD. RAW
DATE 5/14/57

SHEET NO. 7
CONTRACT NO. B1193

NO.	DATE	DESCRIPTION OF REVISION

RD-8

ARK-A-TEX WHITE PENCIL CLOTH — E. K. ELLIOTT CO., PGH., PA.

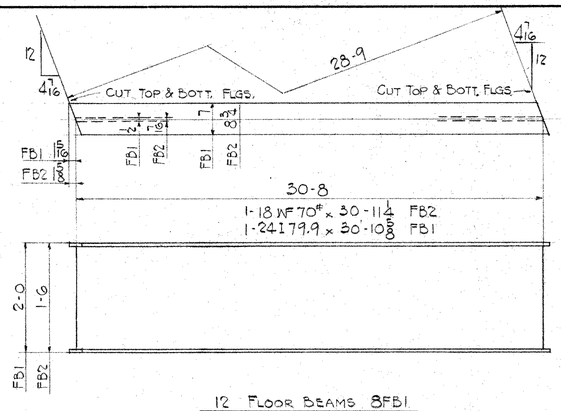

12 FLOOR BEAMS 8FB1
ONE- " " 8FB2

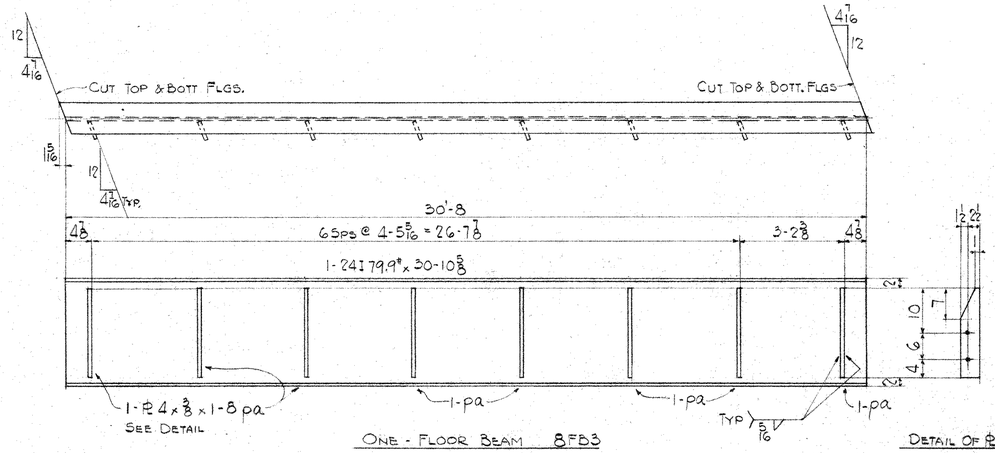

ONE - FLOOR BEAM 8FB3

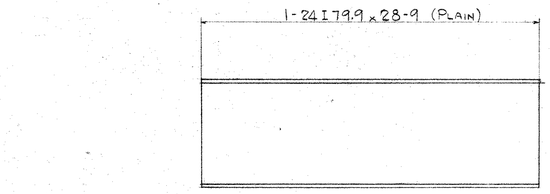

44- FLOOR BEAMS 8FB4

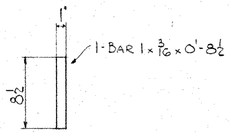

48 - BACK-UP BARS - 8M3

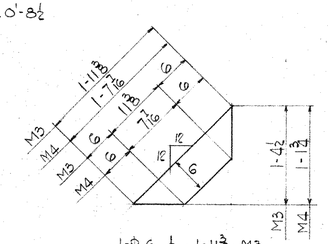

1148 - PLATES 8M3
112 - " 8M4

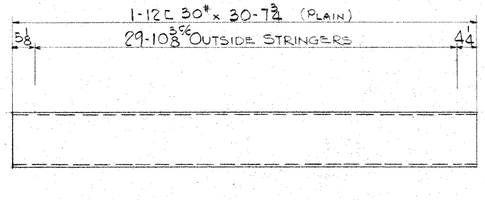

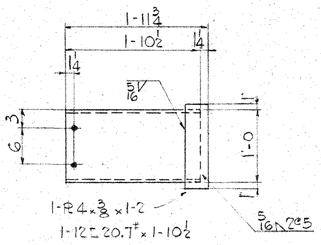

8- DIAPHRAGMS 8D9

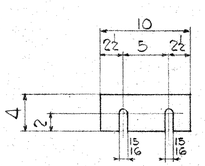

24 - SHIMS 8F1

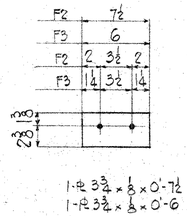

12 - SHIMS 8F2
32 - SHIMS 8F3

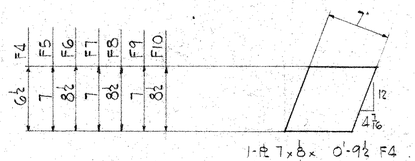

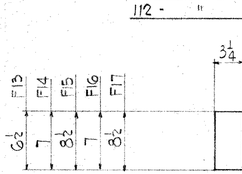

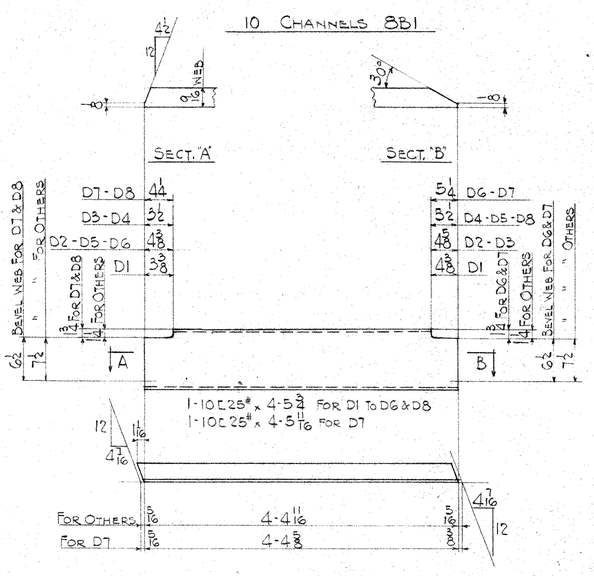

6 - DIAPHRAGMS 8D1
ONE - " 8D2
6 - " 8D3
2 - " 8D4

4 - DIAPHRAGMS 8D5
ONE - " 8D6
3 " 8D7
ONE " 8D8

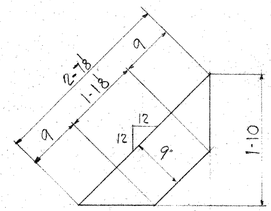

114 - PLATES 8M1

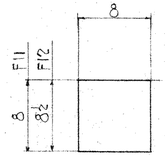

16 - SHIMS 8F11
8 - SHIMS 8F12

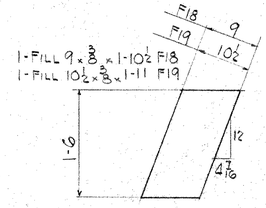

2- FILLS 8F18
2- FILLS 8F19

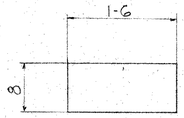

88-FILLS 8F20

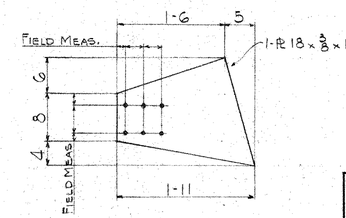

ONE - LATERAL PL 8P1 PIER 10

16 SHIMS - 8F4
128 " - 8F5
128 " - 8F6
56 " - 8F7

56 - SHIMS - 8F8
8 " - 8F9
8 " - 8F10

128 - SHIMS - 8F13
688 - " 8F14
688 - " 8F15
64 " 8F16
64 " 8F17

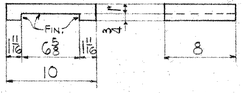

8- SHOES 8SC1

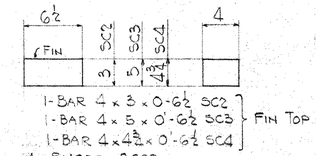

4- SHOES 8SC2
2- " 8SC3
2- " 8SC4

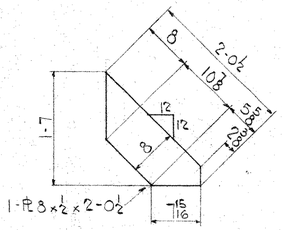

2- PLATES 8M2

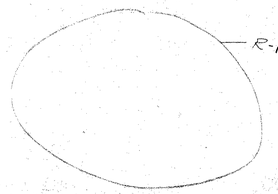

NO.	DATE	DESCRIPTION OF REVISION
1	1/13/58	Deleted Detail of Ls 8M6

PENNA. DEPT. OF HWYS. APPROVED DIVISION SEP 3 - 1958 ENGINEER OF BRIDGES

COMMONWEALTH OF PENNSYLVANIA
DEPARTMENT OF HIGHWAYS
BRIDGE UNIT
LR 04017-4 BEAVER COUNTY
RECONSTRUCTION OF
ELLWOOD KOPPEL BRIDGE
OVER BEAVER RIVER

FERGUSON & EDMONDSON CO.
ENGINEERS & CONSTRUCTORS
PITTSBURGH, PA.

RIVETS None
OPEN HOLES 13/16 ϕ
SHOP PAINT

E.E.Co. MADE RHL
CHKD. RAW
DATE 9/14/57

SHEET NO. 8
CONTRACT NO. B1193

RD-8

ARK-A-TEX WHITE PENCIL CLOTH — B. K. ELLIOTT CO., PGH., PA.

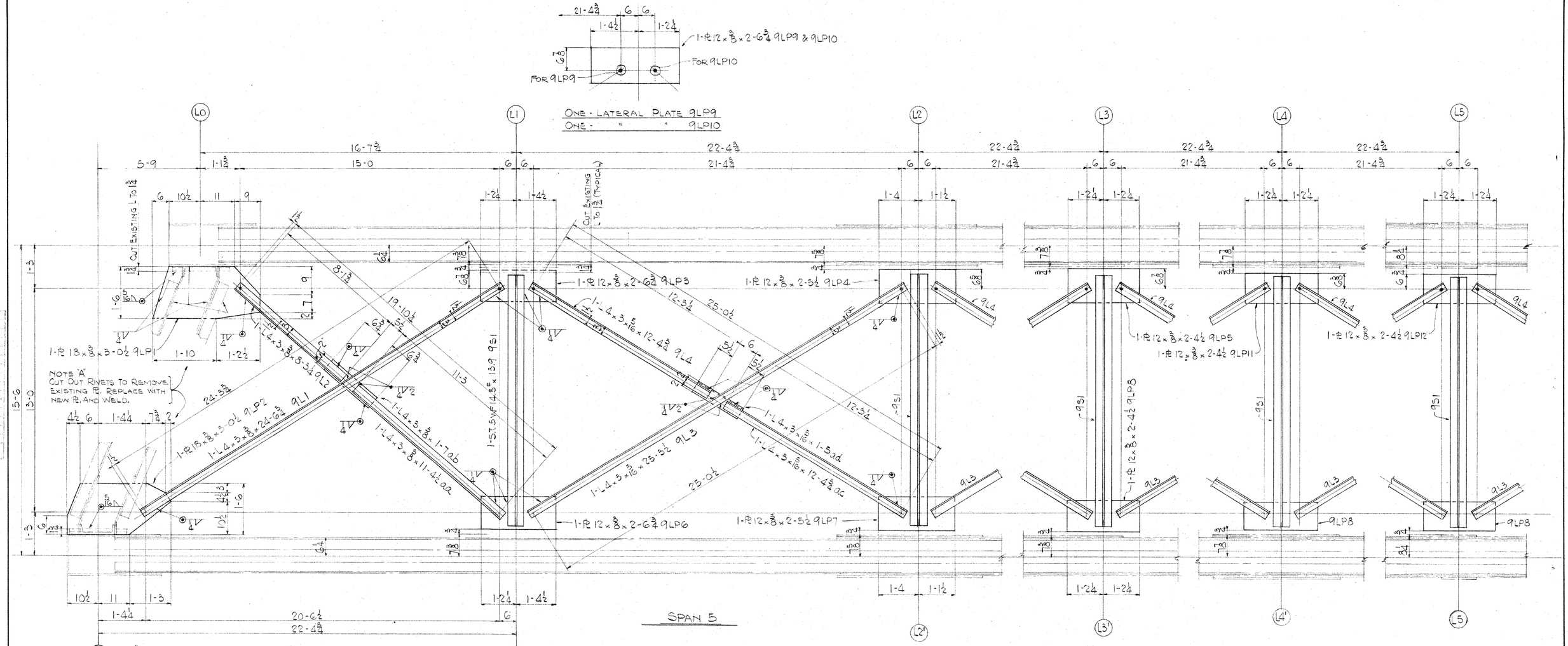

ONE - LATERAL PLATE 9LP9
ONE - " " 9LP10

NOTE "A"
CUT OUT RIVETS TO REMOVE EXISTING PL. REPLACE WITH NEW PL. AND WELD.

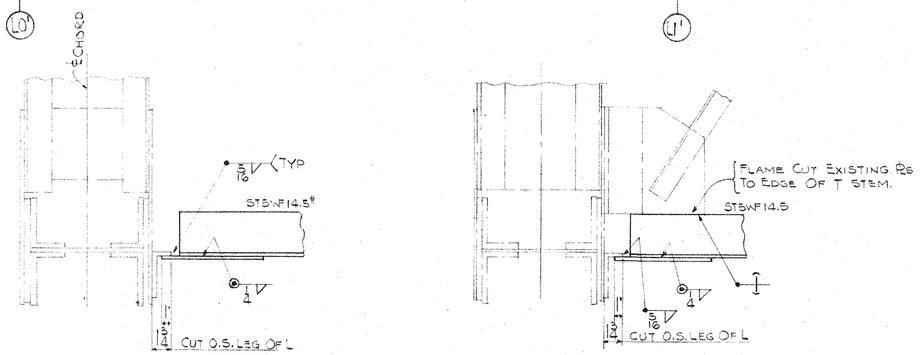

TYPICAL SECTIONS SHOWING PROPOSED CONNECTIONS OF BOTTOM LATERAL PLATES AND STRUTS

SCALE 1½"=1'-0

2 -	BOTTOM LATERALS	9L1
2 -	" "	9L2
8 -	" "	9L3
8 -	" "	9L4
9 -	" STRUTS	9S1
2 -	LATERAL PLATES	9LP1
2 -	" "	9LP2
ONE -	" "	9LP3
2 -	" "	9LP4
2 -	" "	9LP5
ONE -	" "	9LP6
2 -	" "	9LP7
5 -	" "	9LP8
2 -	" "	9LP11
ONE -	" "	9LP12

SEE ERECTION DWG. E3 FOR SPAN 5

GENERAL PROCEDURE

CUT OUTSTANDING LEG OF CONNECTION ANGLES PARALLEL TO AND 1¾" FROM BACK OF OTHER LEG.

REMOVE OLD LATERAL BRACING.

REMOVE OLD LATERAL PLATES AT END STRUTS BY CUTTING OUT RIVETS AS INDICATED IN NOTE "A"

CONNECT NEW LATERAL PLATES TO END STRUTS AND WELD.

CENTER NEW STRUTS ON PANEL POINTS AS ACCURATELY AS POSSIBLE AND WELD NEW PLATES TO ANGLES AS INDICATED

PROCEDURE FOR OBTAINING & DRAW IN LATERAL ANGLES

DRILL 1-13/16" HOLE IN LATERAL PLATE AND 1-13/16" HOLE IN ONE END OF LATERAL ANGLE. INSERT A 3/4" BOLT PULL ANGLE AS FAR AS POSSIBLE TO OPPOSITE SIDE AND WELD AS INDICATED REMOVE BOLT AND DRIVE A 13/16" DRIFT PIN IN HOLE. WELD THIS END AS INDICATED.

ALL MATERIAL SHALL BE CUT TO SIZE OR LENGTH BY SHEARING OR GAS CUTTING USING A MECHANICALLY GUIDED TORCH

PENNA. DEPT. OF HWYS.
APPROVED AS TO DESIGN
SEP 3 - 1958
ENGINEER OF BRIDGES

NO.	DATE	DESCRIPTION OF REVISION

COMMONWEALTH OF PENNSYLVANIA
DEPARTMENT OF HIGHWAYS
BRIDGE UNIT
LR 04017-4 BEAVER COUNTY
RECONSTRUCTION OF ELLWOOD KOPPEL BRIDGE OVER BEAVER RIVER

FERGUSON & EDMONDSON CO.
ENGINEERS & CONSTRUCTORS
PITTSBURGH, PA.

RIVETS NONE
OPEN HOLES 13/16ø
SHOP PAINT

E.E.Co. MADE RHL SHEET NO. 9
CHKD. RAW CONTRACT NO. B1193
DATE 5/14/57

RD-8

ARK-A-TEX WHITE PENCIL CLOTH—B. K. ELLIOTT CO., PGH., PA.

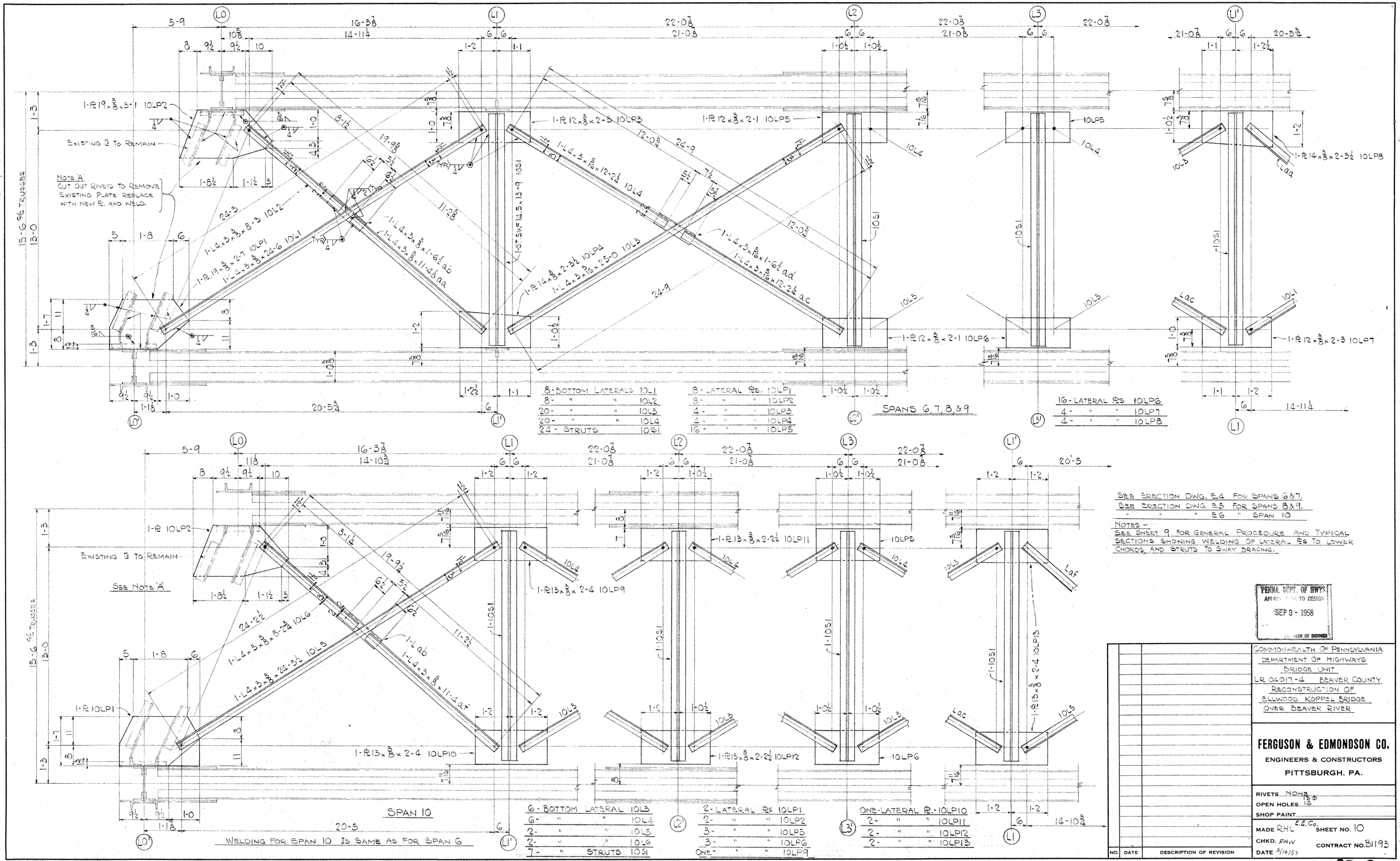
L0
L1
L2
L3
L1'
L0'
L2'
L3'
5-9
16-3⅞
14-11¼
22-0⅞
21-0⅜
20-5¾
21-0⅜
20-5¾
14-11¼
15-6 c/c TRUSSES
13-0
1-3
1-7
1-8
1-0
1-2
1-1
1-0½
1-2½
1-2¼
1-1½
1-8½
1-1½
1-2½
1-0½
1-1
1-2
1-2
1-1
1-2
1-2
1-0½
1-0½
1-0½
1-0½
1-2
1-2
1-1
1-2
1-2
1-1
1-2
1-2
1-1

BOTTOM LATERALS - SPAN 4

ELEVATION OF TRUSSES SPAN 4

SECT. AA

DETAIL 'D'
USE THIS DETAIL TO REINFORCE ALL FOUR JOINTS L1, L1' & L1"
DO NOT WELD THE ½ PLS TO TRUSS GUSSETS

NOTE 'A'
DRILL FIELD HOLES IN PLATES TO MATCH HOLES IN TRUSS MEMBERS

4 - BOTTOM STRUTS	11S1
ONE - " "	11S2
ONE - BOTTOM LATERAL	11L1
ONE - " "	11L2
2 - " "	11L3
2 - " "	11L4
ONE - " "	11L5
ONE - " "	11L6
ONE - LATERAL PLATE	11LP1
ONE - " "	11LP2
ONE - " "	11LP8
ONE - " "	11LP9
8 - PLATES	11P1

3 - LATERAL PLATE	11LP3
2 - " "	11LP4
ONE - " "	11LP5
ONE - " "	11LP6
ONE - " "	11LP7
2 - REINFORCING PL.	11RP1
2 " "	11RP2
ONE - " "	11RP3
ONE - " "	11RP4
4 - " "	11RP5
2 - DIAGONALS	11D1R
2 - "	11D1L LEFT
2 - "	11D2R
2 - "	11D2L LEFT

WORK TO BE DONE

1- REPLACE BOTTOM LATERAL SYSTEM AS SHOWN AND NOTED. REMOVE THE LATERALS BY CUTTING OUT THE RIVETS THAT CONNECT LATERAL PLS. TO BOTTOM CHORDS. REMOVE BENT PLS AT L1, L1' & L1" BY CUTTING OUT RIVETS THAT CONNECT THEM TO END BRACING AND TRUSS MEMBERS SEE SHEET NO 9 FOR PROCEDURE FOR OBTAINING & DRAW IN LATERAL ANGLES.

2- REINFORCE BOTH TRUSSES AS SHOWN AND NOTED ON ELEVATION. THIS REINFORCEMENT MUST BE DONE WHILE THE OLD TIMBER DECK, RAILING, AND STRINGER ARE REMOVED, BUT WITH THE FLOOR BEAMS IN PLACE.
MEMBERS TO BE REINFORCED ARE U2-U4', U2'-U4', L3-L3', U0-L1, U2'-L3, AND U2'-L3', BOTH TRUSSES; ALSO U0'-L1' AND U0'-L1".

USE ¾ Φ HIGH TENSILE BOLTS IN PLACE OF RIVETS

ALL MAT'L. SHALL BE CUT TO SIZE OR LENGTH BY SHEARING OR GAS CUTTING USING A MECHANICALLY GUIDED TORCH.

PENNA. DEPT. OF HWYS.
APPROVED AS TO DESIGN
SEP 3 - 1958
ENGINEER OF BRIDGES

COMMONWEALTH OF PENNSYLVANIA
DEPARTMENT OF HIGHWAYS
BRIDGE UNIT
LR 04017 - 4 BEAVER COUNTY
RECONSTRUCTION OF
ELLWOOD KOPPEL BRIDGE
OVER BEAVER RIVER

FERGUSON & EDMONDSON CO.
ENGINEERS & CONSTRUCTORS
PITTSBURGH, PA.

RIVETS
OPEN HOLES
SHOP PAINT

MADE EECO RHL
CHKD. RAW
DATE 5/14/57

SHEET NO. 11
CONTRACT NO. 51193

NO.	DATE	DESCRIPTION OF REVISION

RD-8

ARK-A-TEX WHITE PENCIL CLOTH — D. K. ELLIOTT CO., PGH., PA.

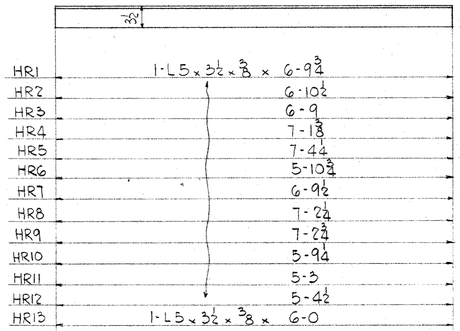

2- HANDRAIL	12HR1
6- "	12HR2
8- "	12HR3
4- "	12HR4
14- "	12HR5
6- "	12HR6
10- "	12HR7

10- HANDRAIL	12HR8
42- "	12HR9
24- "	12HR10
2- "	12HR11
4- "	12HR12
10- "	12HR13

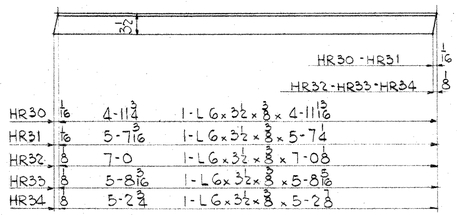

2- HANDRAIL	12HR30
5- "	12HR31
ONE "	12HR32

3 - HANDRAIL	12HR33
ONE "	12HR34

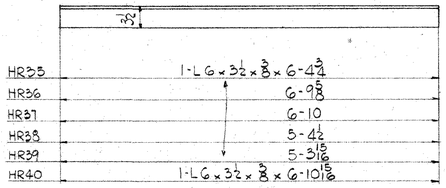

2- HANDRAIL	12HR35
2- "	12HR36
12- "	12HR37

4- HANDRAIL	12HR38
6- "	12HR39
ONE- "	12HR40

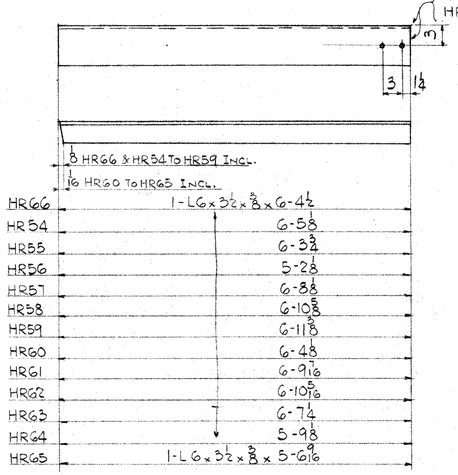

2- HANDRAIL	12HR54R
2 - "	12HR54L LEFT
3 - "	12HR55R
5- "	12HR55L LEFT
ONE "	12HR56 LEFT
ONE "	12HR57
8 "	12HR58R
8 "	12HR58L LEFT
ONE "	12HR59 LEFT

ONE - HANDRAIL	12HR60R
2 - "	12HR60L LEFT
18 - "	12HR61R
18 - "	12HR61L LEFT
2 - "	12HR62
ONE - "	12HR63
2 - "	12HR64
2 - "	12HR65 LEFT
ONE "	12HR66R
ONE "	12HR66L LEFT

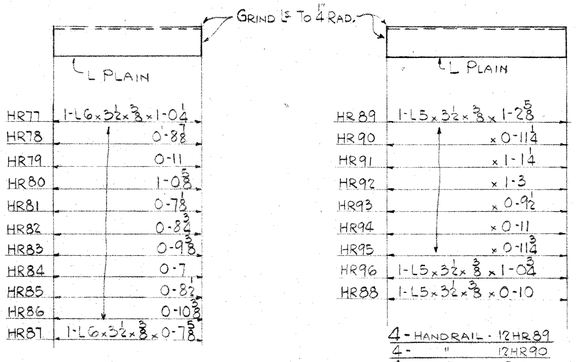

4- HANDRAIL	12HR77
4 - "	12HR78
1 - "	12HR79
2 - "	12HR80
2 - "	12HR81
4 "	12HR82
4 "	12HR83
2 "	12HR84
2 "	12HR85
2 "	12HR86
2 "	12HR87

4- HANDRAIL	12HR89
4 - "	12HR90
4 - "	12HR91
2 - "	12HR92
4 - "	12HR93
6 - "	12HR94
4 - "	12HR95
2 - "	12HR96
2 - "	12HR88

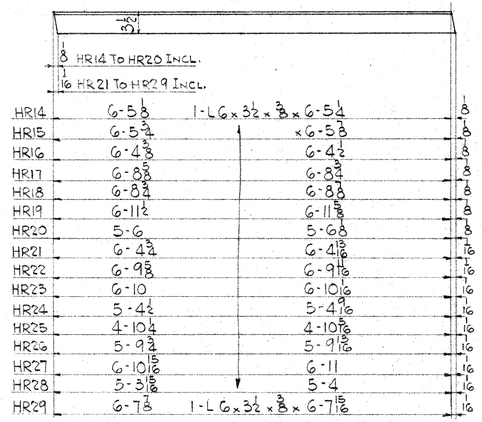

ONE - HANDRAIL	12HR14R
ONE - "	12HR14L LEFT
3 - "	12HR15R
3 - "	12HR15L LEFT
4 - "	12HR16R
3 - "	12HR16L LEFT
ONE - "	12HR17
ONE - "	12HR18
7 - "	12HR19R
7 - "	12HR19L LEFT
3 - "	12HR20R
ONE "	12HR20L LEFT
ONE "	12HR21R
2 "	12HR21L LEFT

ONE - HANDRAIL	12HR22R
2 - "	12HR22L LEFT
15 - "	12HR23R
15 - "	12HR23L LEFT
5 - "	12HR24R
7 - "	12HR24L LEFT
ONE - "	12HR25R
ONE - "	12HR25L LEFT
3 - "	12HR26
2 - "	12HR27R
ONE - "	12HR27L LEFT
6 - "	12HR28R
3 - "	12HR28L LEFT
ONE - "	12HR29

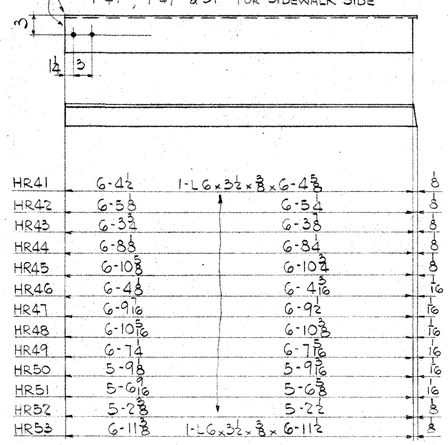

2- HANDRAIL	12HR41R
2- "	12HR41L LEFT
2- "	12HR42R
2- "	12HR42L LEFT
3- "	12HR43R
3- "	12HR43L LEFT
ONE - "	12HR44
8 "	12HR45R
8 "	12HR45L LEFT

ONE - HANDRAIL	12HR46R
2 - "	12HR46L LEFT
18 - "	12HR47R
18 - "	12HR47L LEFT
2 - "	12HR48
ONE - "	12HR49
3 - "	12HR50
3 - "	12HR51 LEFT
ONE - "	12HR52 LEFT
ONE - "	12HR53 LEFT

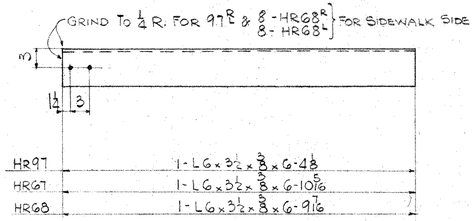

2- HANDRAIL	12HR97R
2- "	12HR97L LEFT
2- "	12HR67R
2- "	12HR67L LEFT

16 - HANDRAIL	12HR68R
16 - "	12HR68L LEFT

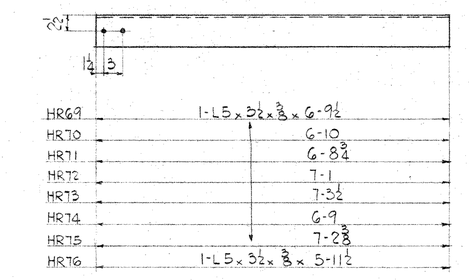

4- HANDRAIL	12HR69R
2- "	12HR69L LEFT
4- "	12HR70R
4- "	12HR70L LEFT
6- "	12HR71R
6- "	12HR71L LEFT
2- "	12HR72R
2- "	12HR72L LEFT

16- HANDRAIL	12HR73R
16- "	12HR73L LEFT
10- "	12HR74R
10- "	12HR74L LEFT
52- "	12HR75R
52- "	12HR75L LEFT
4- "	12HR76R
6- "	12HR76L LEFT

PENNA. DEPT. OF HWYS. APPROVED AS TO DESIGN SEP 3 - 1958 ENGINEER OF BRIDGES

COMMONWEALTH OF PENNSYLVANIA
DEPARTMENT OF HIGHWAYS
BRIDGE UNIT
LR 04017-4 BEAVER COUNTY
RECONSTRUCTION OF
ELLWOOD KOPPEL BRIDGE
OVER BEAVER RIVER

FERGUSON & EDMONDSON CO.
ENGINEERS & CONSTRUCTORS
PITTSBURGH, PA.

RIVETS
OPEN HOLES 13/16 ϕ
SHOP PAINT

MADE EGC RHL SHEET NO. 12
CHKD. RAW CONTRACT NO. 81193
DATE 5/14/57

NO.	DATE	DESCRIPTION OF REVISION

RD-8

ARK-A-TEX WHITE PENCIL CLOTH—D. K. ELLIOTT CO., PGH., PA.

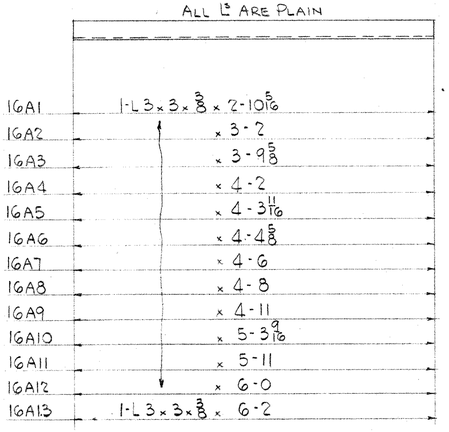

ONE - ANGLE	16A1
3 - "	16A2
ONE - "	16A3
ONE - "	16A4
ONE - "	16A5

ONE - ANGLE	16A6
2 - "	16A7
3 - "	16A8
ONE - "	16A9

ONE - ANGLE	16A10
ONE - "	16A11
3 - "	16A12
143 - "	16A13

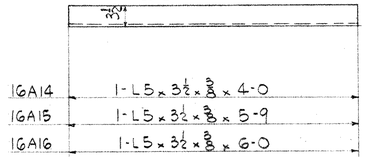

2 - ANGLES	16A14
8 - "	16A15
23 - "	16A16

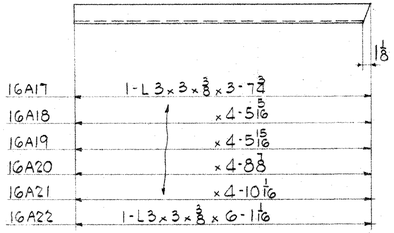

ONE - ANGLE	16A17
ONE - "	16A18
ONE - "	16A19
2 - "	16A20
ONE - "	16A21
ONE - "	16A22

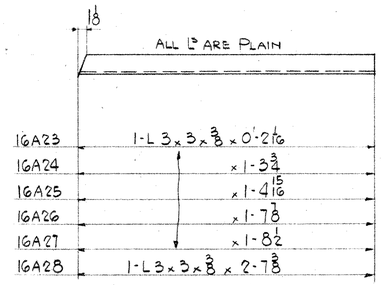

ONE - ANGLE	16A23
ONE - "	16A24
2 "	16A25
ONE "	16A26
ONE "	16A27
ONE "	16A28

PENNA. DEPT. OF HWYS.
APPROVED AS TO DESIGN
SEP 3 - 1958
ENGINEER OF BRIDGES

NO.	DATE	DESCRIPTION OF REVISION

COMMONWEALTH OF PENNSYLVANIA
DEPARTMENT OF HIGHWAYS
BRIDGE UNIT
LR 04017-4 BEAVER COUNTY
RECONSTRUCTION OF
ELLWOOD KOPPEL BRIDGE
OVER BEAVER RIVER

FERGUSON & EDMONDSON CO.
ENGINEERS & CONSTRUCTORS
PITTSBURGH, PA.

RIVETS None
OPEN HOLES None
SHOP PAINT

EECo
MADE RHL SHEET NO. 16
CHKD. RAW 11/1/58 CONTRACT NO. B1193
DATE

RD-8

ARK-A-TEX WHITE PENCIL CLOTH — W. K. ELLIOTT CO., PGH., PA.

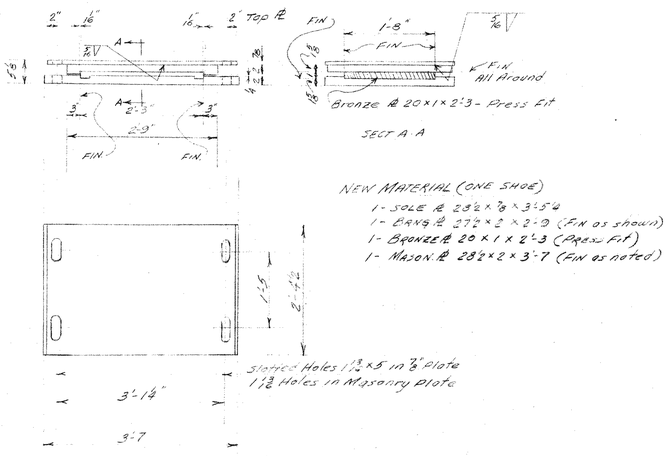

REPAIR EXP SHOE FOR PIER 4 (SPAN 5)
17 SP1 (2 REQD)

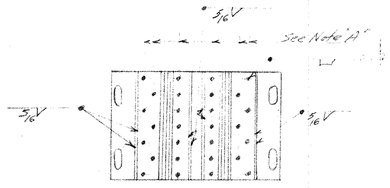

TYP FIELD WELDING FOR
17 SP1 & 17 SP4

NOTE "A"
Cut out existing rivets in holes indicated & fill holes by plug welding to new material (See Pa Dept of Highways Dwg No R 428 Sh 10 of 12)

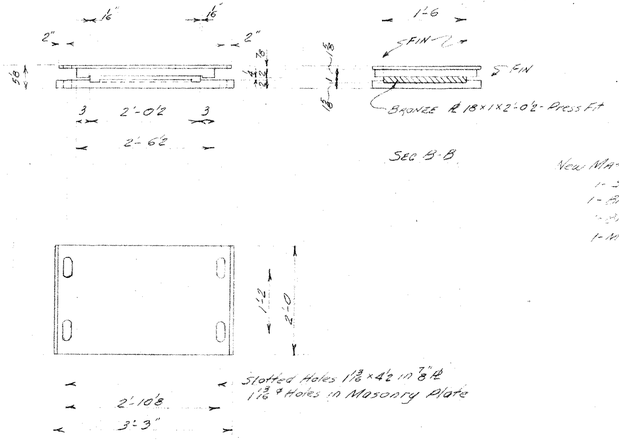

REPAIR OF
EXPANSION SHOES FOR SPANS NO 6 TO NO 10 INCL
ON PIERS NO 6 TO NO 10 INCL

17 SP4 (PIERS 6 & 10 INCL) (10 REQD)

NEW MATERIAL (ONE SHOE)
1 - Sole ℄ 24 x ⅞ x 3'-2⅝
1 - Bars ℄ 23 x 2 x 2'-4½
1 - Bronze ℄ 18 x 1 x 2'-0½ (Press Fit)
1 - Masonry ℄ 24 x 2 x 3'-3 (FIN as noted)

MATERIAL:
All new material listed on this sheet shall be Structural Carbon Steel except Bronze Bearing Plates when noted.
Bronze shall conform to A.S.T.M Designation B100-54, Alloy I
The Bronze Plates shall be one of the following
Metlon Bronze Alloy with "Lubrite Trepanned Inserts" as manufactured by Merriman Bros, Inc. Boston, Mass
or
"Metaline" Plates as mfd by the Spadone-Alpha Corporation, South Norwalk, Conn
or
"Graphite Bronze Plates" as mfd by the Whitten Bearing Corporation, Chicago, Illinois.

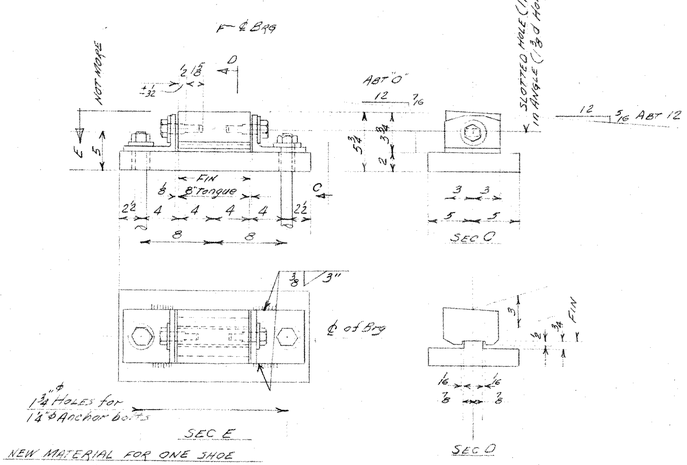

NEW MATERIAL FOR ONE SHOE
1 - Sole ℄ 6 x 3 (long) x 0'-8"
1 - Mas. ℄ 10 x 2¾ x 1'-9
2 - Shouldered turned Top Bolts 3" lg
2 - Washers 2¼" x ⅜ thk, 1⅛ hole
2 - Ls 6 x 3½ x ½ x 0'-6
2 - Swedged Anchor Bolts 1¼ x 2'-3
2 - Washers 3" x ⅜ - 1⅛ hole

NEW FIXED SHOES
17 SP2 ABT D (2 REQD)
17 SP3 ABT 12 (2 REQD)

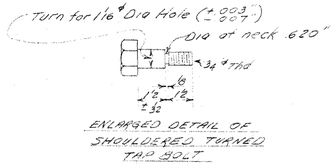

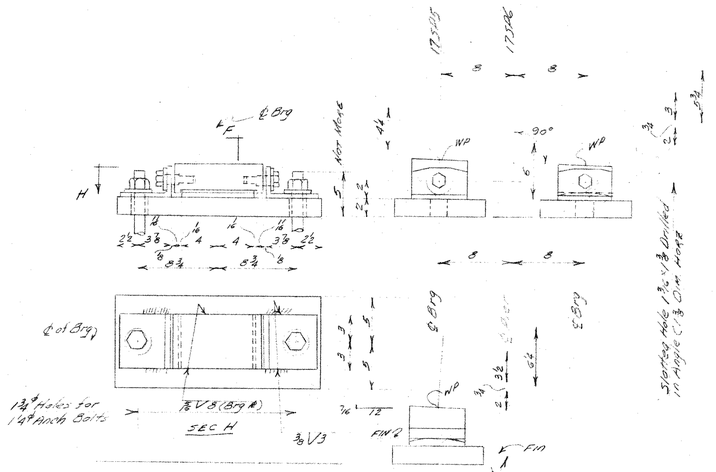

NEW EXP SHOES AT PIER NO. 1

17 SP5	PIER No 1	2 REQD
17 SP6	" "	2 REQD

NEW MATERIAL FOR ONE SHOE
1 - Sole ℄ 6 x (4 or 3½) on ℄ x 0'-9¾
(F2E & F2 Sizes)
1 - Mas ℄ 10 x 2 x 1'-10½
1 - Brg ℄ 6 x ⅜ x 0'-5
2 - Ls 6 x 3½ x ½ x 0'-6
2 - Shouldered turned Top Bolts 3" lg
(See Abut Shoe Detail)
2 - Washers 2¼" x ⅜ thk 1⅛ hole
2 - Swedged Anchor Bolts 1¼" x 2'-3
2 - Washers 3" x ⅜ Thk - 1⅛" hole

PENNA DEPT. OF HWYS.
APPROVED AS TO DESIGN
APR 25 1958
ENGINEER OF BRIDGES

NO.	DATE	DESCRIPTION OF REVISION

COMMONWEALTH OF PENNSYLVANIA
DEPARTMENT OF HIGHWAYS
BRIDGE UNIT
LR 04017-4 BEAVER COUNTY
RECONSTRUCTION OF
ELLWOOD - KOPPEL BRIDGE
OVER BEAVER RIVER

FERGUSON & EDMONDSON CO.
ENGINEERS & CONSTRUCTORS
PITTSBURGH, PA.

RIVETS
OPEN HOLES
SHOP PAINT
SEE C.O.

MADE JJB
CHKD. JJB
DATE 3/3/57

SHEET NO. 17
CONTRACT NO. B1193

RDB

ARK-A-TEX WHITE PENCIL CLOTH—D. K. ELLIOTT CO., PGH., PA.

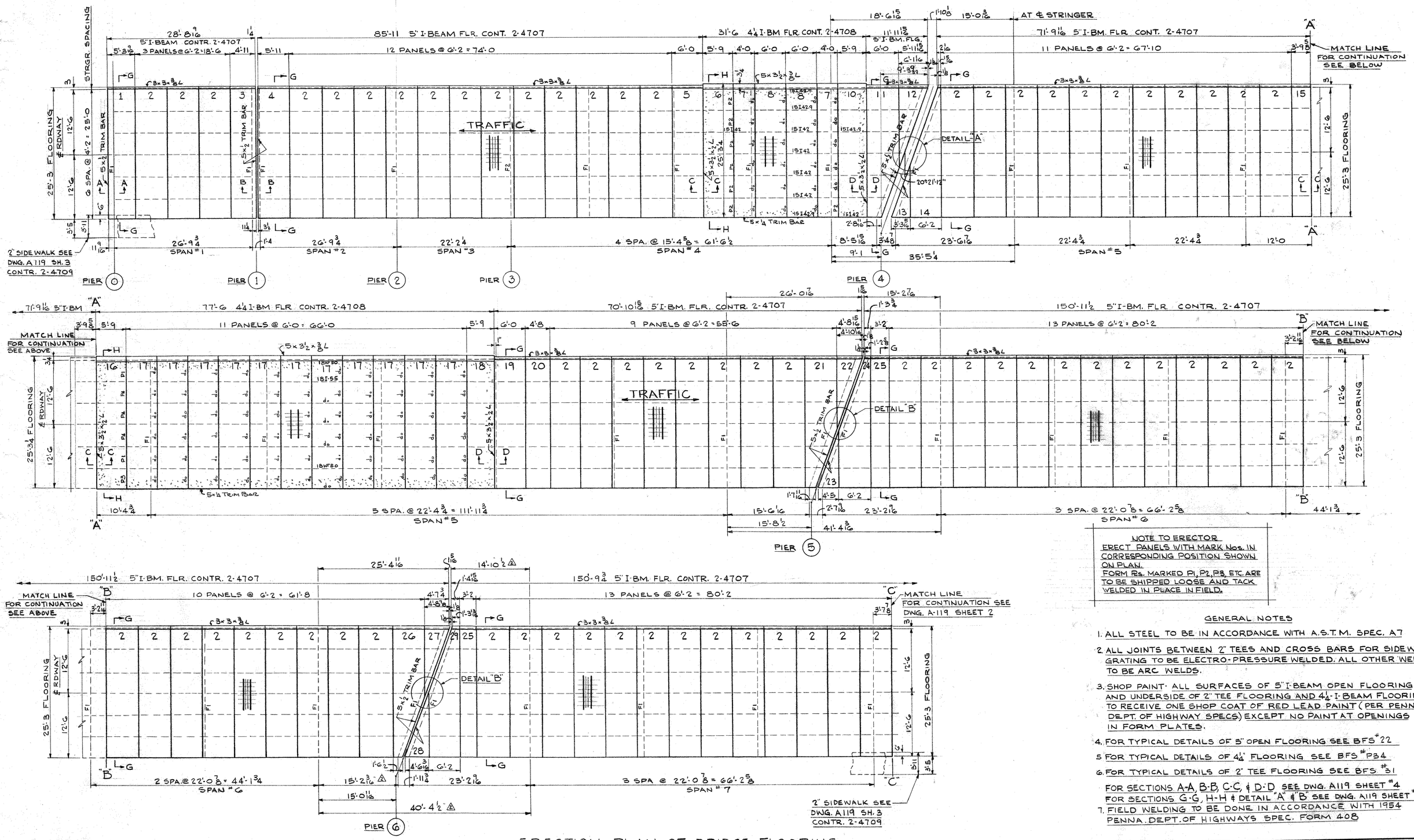

ERECTION PLAN OF BRIDGE FLOORING.

5" I-BEAM FLOORING - CONTR. 2-4707
4 1/4 I-BEAM FLOORING - CONTR. 2-4708

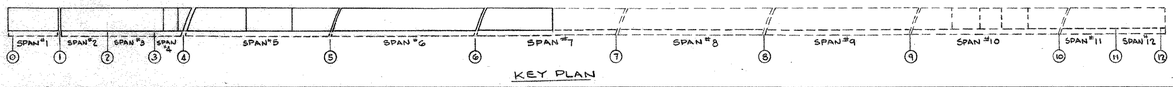

NOTE TO ERECTOR
ERECT PANELS WITH MARK Nos. IN CORRESPONDING POSITION SHOWN ON PLAN.
FORM Pcs. MARKED P1, P2, P3, ETC. ARE TO BE SHIPPED LOOSE AND TACK WELDED IN PLACE IN FIELD.

GENERAL NOTES

1. ALL STEEL TO BE IN ACCORDANCE WITH A.S.T.M. SPEC. A7
2. ALL JOINTS BETWEEN 2" TEES AND CROSS BARS FOR SIDEWALK GRATING TO BE ELECTRO-PRESSURE WELDED. ALL OTHER WELDS TO BE ARC WELDS.
3. SHOP PAINT ALL SURFACES OF 5" I-BEAM OPEN FLOORING AND UNDERSIDE OF 2" TEE FLOORING AND 4 1/4" I-BEAM FLOORING TO RECEIVE ONE SHOP COAT OF RED LEAD PAINT (PER PENNA. DEPT. OF HIGHWAY SPECS) EXCEPT NO PAINT AT OPENINGS IN FORM PLATES.
4. FOR TYPICAL DETAILS OF 5" OPEN FLOORING SEE BFS #22
5. FOR TYPICAL DETAILS OF 4 1/4" FLOORING SEE BFS #P34
6. FOR TYPICAL DETAILS OF 2" TEE FLOORING SEE BFS #31

FOR SECTIONS A-A, B-B, C-C, & D-D SEE DWG. A119 SHEET #4
FOR SECTIONS G-G, H-H & DETAIL "A" & "B" SEE DWG. A119 SHEET #5

7. FIELD WELDING TO BE DONE IN ACCORDANCE WITH 1954 PENNA. DEPT. OF HIGHWAYS SPEC. FORM 408

NO.	REVISION	BY	DATE
1	ADD 3x3x3/8 L @ ONE END OF 5" FLOORING. ADD 5x3 1/2 x 3/8 L @ ONE END OF 4 1/4 FLOORING.	HAS.	8-19-57
2	REVISED AS PER CUST. APP. DWG. DATED 9-9-57.	S.B.	9-16-57

CUSTOMER: FERGUSON & EDMONDSON
ORDER NO. 4268
REFERENCE DRAWINGS: COMM. OF PENNA. DEPT. OF HIGHWAYS DWGS. R-428 SH. 1 TO 12

RELIANCE STEEL PRODUCTS COMPANY
McKEESPORT, (PITTSBURGH DISTRICT) PA. BRIDGE DEPARTMENT
TITLE 5" I-BEAM WELDLOCK, 4 1/4 I-BEAM INTERLOCK & 2" TEE FLOORING
LOCATION ELLWOOD-KOPPEL BRIDGE, BEAVER COUNTY, PENNA.

			APPROVED BY	DWG. NO.	CONTRACT NO.
DRAWN	J.FT.	12-19-56		A119	2-4707
CHECKED	G.S.	1-26-57		10F5	2-4708
TRACED			1-24-57		2-4709

RD-18

270212 ELLCO-VEL—B. K. ELLIOTT CO.—8-56

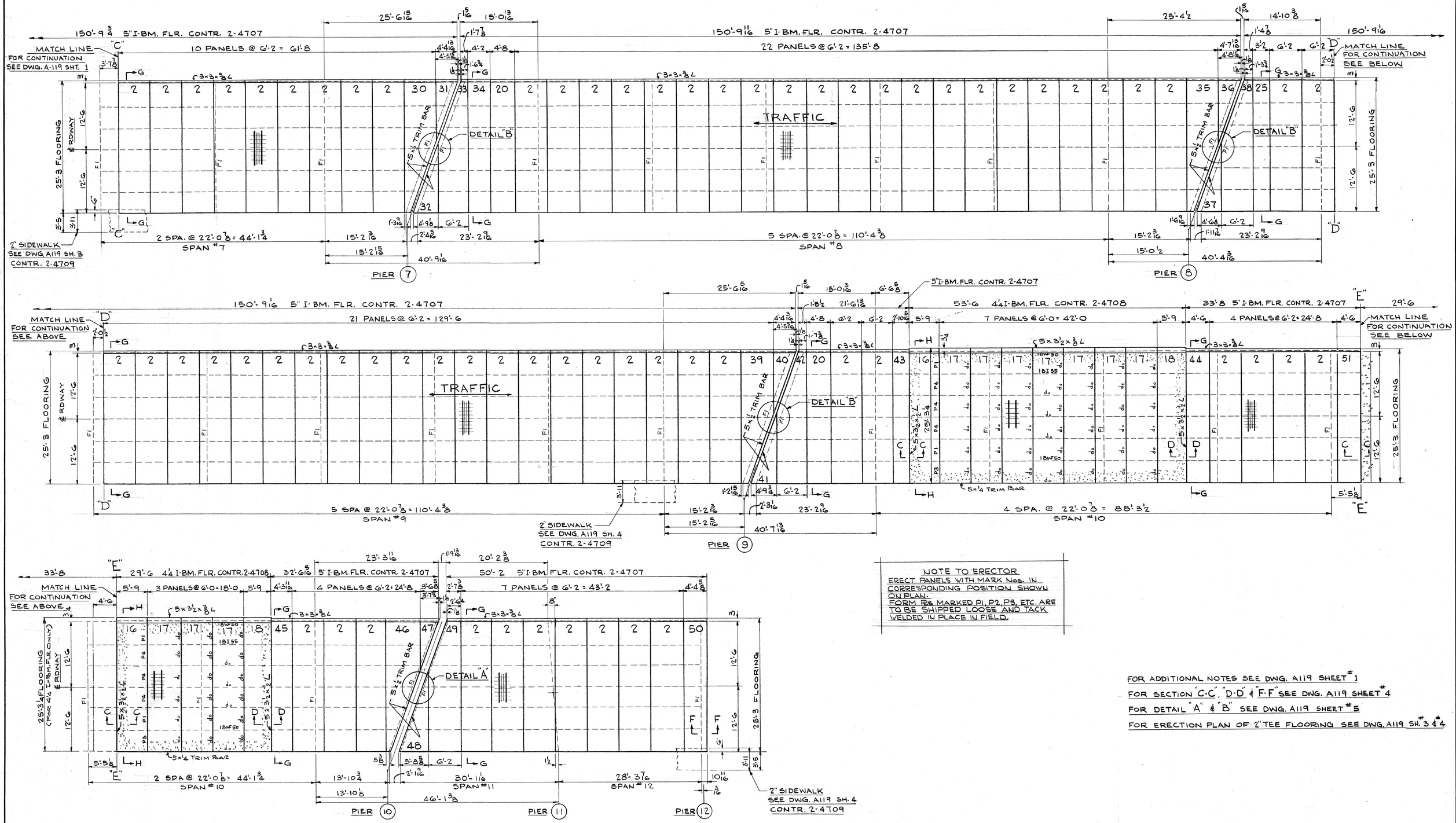

NOTE TO ERECTOR

ERECT PANELS WITH MARK Nos. IN CORRESPONDING POSITION SHOWN ON PLAN. FORM PS MARKED P1, P2, P3, ETC. ARE TO BE SHIPPED LOOSE AND TACK WELDED IN PLACE IN FIELD.

FOR ADDITIONAL NOTES SEE DWG. A119 SHEET # 1

FOR SECTION "C-C", "D-D" & "F-F" SEE DWG. A119 SHEET # 4

FOR DETAIL "A" & "B" SEE DWG. A119 SHEET # 5

FOR ERECTION PLAN OF 2" TEE FLOORING SEE DWG. A119 SH. # 3 & # 4

ERECTION PLAN OF BRIDGE FLOORING.

5" I-BEAM FLOORING CONTR. 2-4707

4 1/4 I-BEAM FLOORING CONTR. 2-4708

KEY PLAN

NO.	REVISION	BY	DATE
1	ADD 3x3x3/8 L @ ONE END OF 5" FLOORING; ADD 5x3 1/2x3/8 L @ ONE END OF 4 1/4 FLOORING	HAS.	8-19-57

CUSTOMER: FERGUSON & EDMONDSON

ORDER NO. 4268

REFERENCE DRAWINGS: Comm. of Penna. Dept. of Highways Dwgs. R-428 sh. 1 to 12

RELIANCE STEEL PRODUCTS COMPANY

McKEESPORT, (PITTSBURGH DISTRICT) PA. BRIDGE DEPARTMENT

TITLE 5" I-BEAM WELDLOCK, 4 1/4 I-BEAM INTERLOCK & 2" TEE FLOORING

LOCATION ELLWOOD-KOPPEL BRIDGE, BEAVER COUNTY, PENNA.

				DWG. NO.	CONTRACT NO.
DRAWN	J.F.T.	12-19-56	APPROVED BY	A119	2-4707
CHECKED	G.S.	1-26-57	AMK 1-24-57	2 OF 5	2-4708
TRACED					2-4709

RD-18

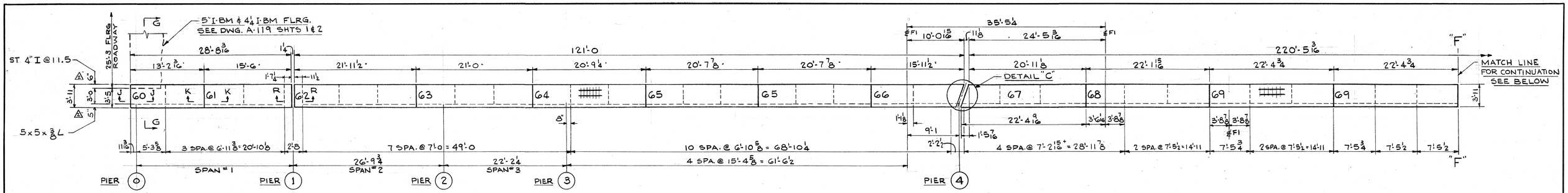

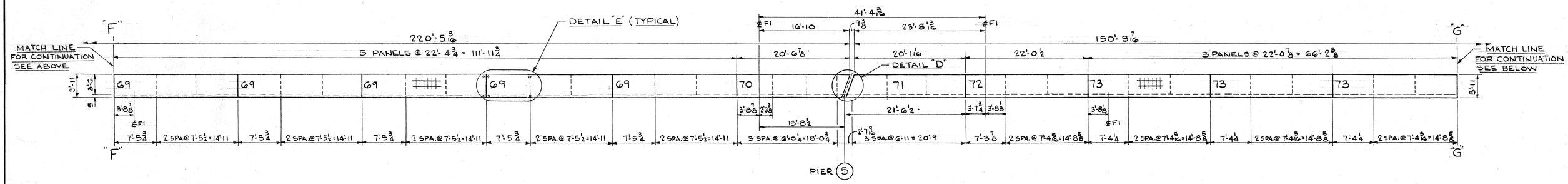

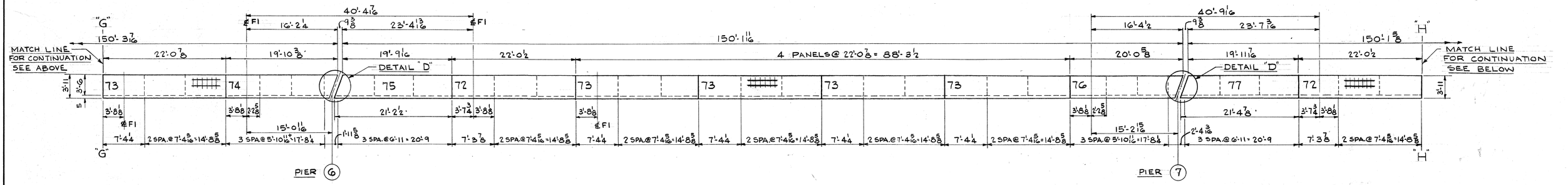

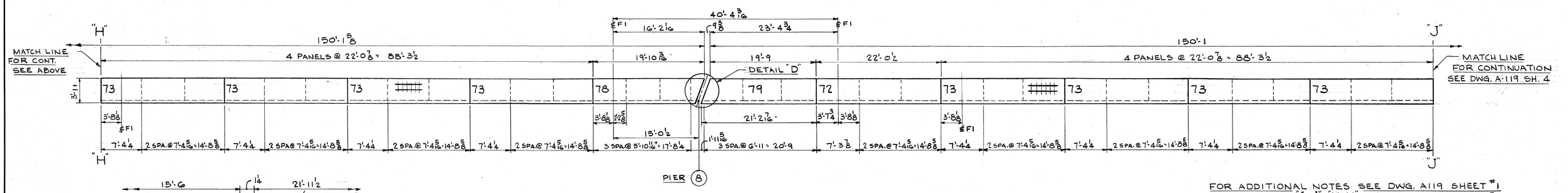

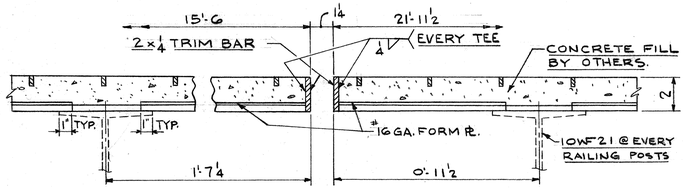

SECTION R-R

ERECTION PLAN OF SIDEWALK FLOORING

2' TEE FLOORING CONTR. 2-4709

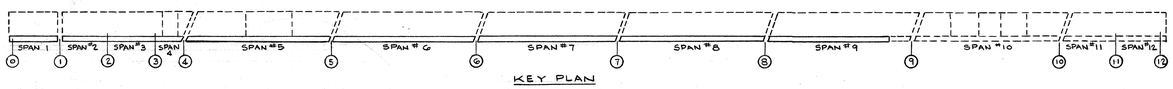

KEY PLAN

FOR ADDITIONAL NOTES SEE DWG. A119 SHEET #1
FOR SECTION "J-J", "K-K" SEE DWG. A119 SHEET #4
FOR DETAIL "C", "D" & "E" SEE DWG. A119 SHEET #5

FOR 5" I-BM. FLRG. CONTR. 2-4707 AND 4¼ I-BM. FLRG. CONTR. 2-4708 SEE DWG. A119 SHEETS 1 & 2

NO.	REVISION	BY	DATE
1	REVISED AS PER CUST. APP. DWG. DATED. 9-9-57	S.B.	9-16-57

CUSTOMER: FERGUSON & EDMONDSON
ORDER NO. 4268
REFERENCE DRAWINGS: COMM. OF PENNA. DEPT. OF HIGHWAYS DWGS. R-428 SH. 1 TO 12

RELIANCE STEEL PRODUCTS COMPANY
McKEESPORT, (PITTSBURGH DISTRICT) PA. BRIDGE DEPARTMENT

TITLE 5" I. BEAM WELDLOCK, 4¼-BEAM INTERLOCK & 2" TEE FLOORING
LOCATION ELLWOOD-KOPPEL BRIDGE, BEAVER COUNTY, PENNA.

DRAWN	J.F.T.	12-19-56	
CHECKED	G.S.	1-24-57	
TRACED			

APPROVED BY: O.K. 1-24-57
DWG. NO. A119 3 OF 5
CONTRACT NO. 2-4707, 2-4708, 2-4709

RD-18

#70212 ELLCO-VEL—R. K. ELLIOTT CO.—8-56

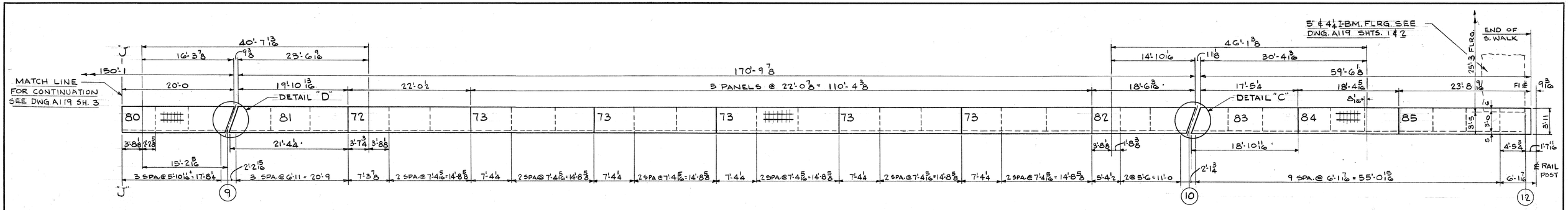

ERECTION PLAN OF SIDEWALK FLOORING

2" TEE FLOORING CONTR. 2-4709

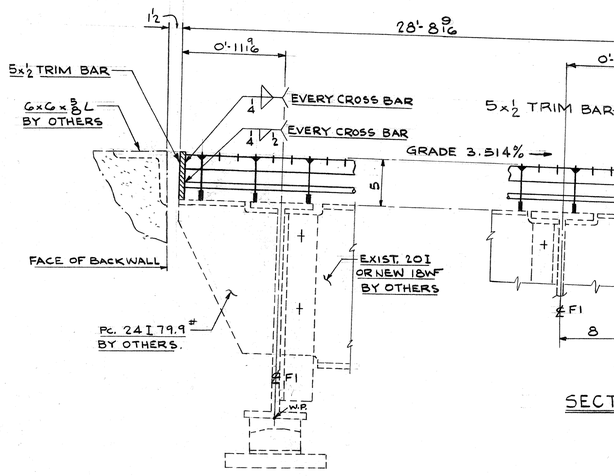

SECTION A-A

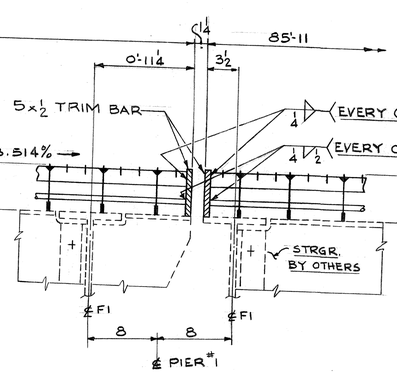

SECTION B-B

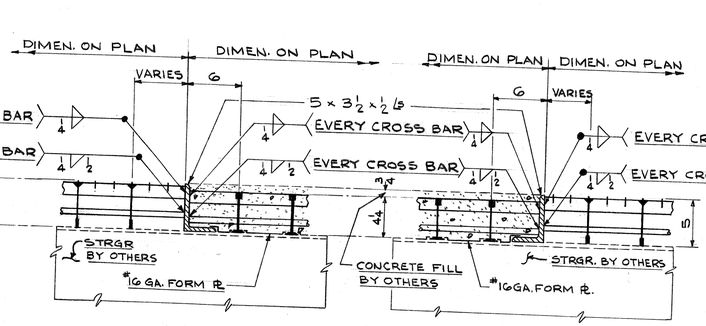

SECTION C-C

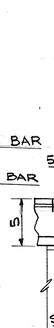

SECTION D-D

SECTION E-E

TYPICAL SECTION THRU FLRG. @ EXPANSION JOINTS #5, 6, 7, 8 & #9

SECTION F-F

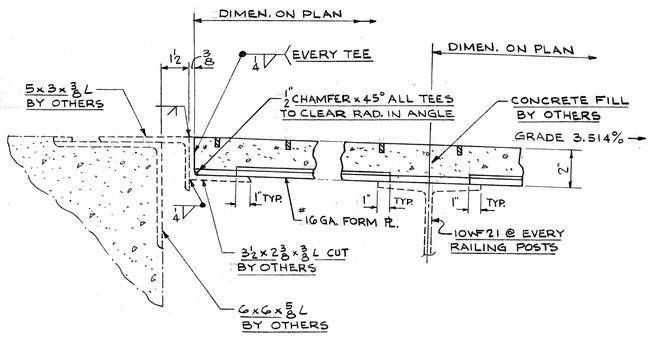

SECTION J-J

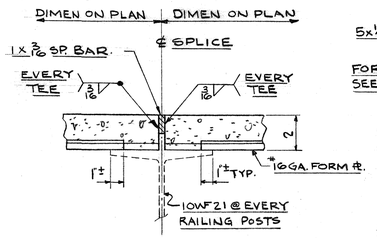

TYPICAL SECTION THRU SIDEWALK AT ALL PANEL SPLICES

SECTION K-K

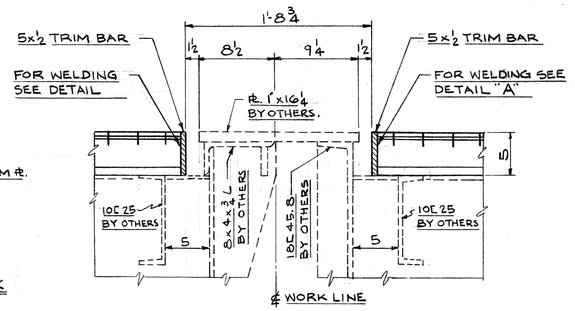

SECTION N-N

TYPICAL SECTION THRU 5" FLOORING @ EXPANSION JOINT #4

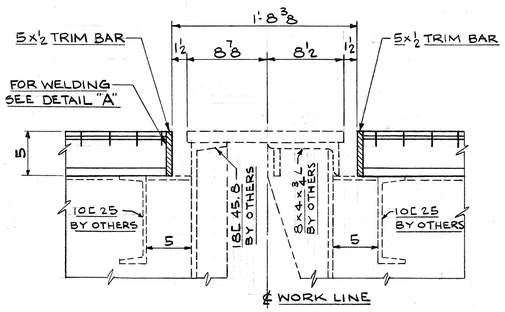

SECTION P-P

TYPICAL SECTION THRU 5" FLOORING @ EXPANSION JOINT #10

FOR ADDITIONAL NOTES SEE DWG. A119 SHT. #1

FOR DETAIL "C" & "D" SEE DWG. A119 SHT. #5

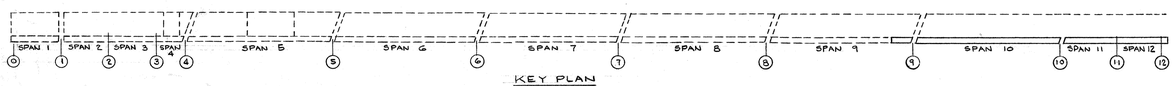

KEY PLAN

NO.	REVISION	BY	DATE
1	REVISED AS PER CUST. APP. DWG. DATED 9-9-57	S.B.	9-16-57

CUSTOMER: FERGUSON & EDMONDSON

ORDER NO. 4268

REFERENCE DRAWINGS: COMM. OF PENNA. DEPT. OF HIGHWAYS Dwgs. R-428 SH. 1 TO 12

RELIANCE STEEL PRODUCTS COMPANY

McKEESPORT, (PITTSBURGH DISTRICT) PA. BRIDGE DEPARTMENT

TITLE 5" I-BEAM WELDLOCK, 4½ I-BEAM INTERLOCK & 2" TEE FLOORING

LOCATION ELLWOOD - KOPPEL BRIDGE, BEAVER COUNTY, PENNA.

DRAWN	J.F.T.	12-19-56	APPROVED BY	DWG. NO. A119
CHECKED	G.S.	1-24-57		4 OF 5
TRACED			1-28-57	

CONTRACT NO. 2-4707, 2-4708, 2-4709

RD-18

70312 ELLCO-VEL—B. K. ELLIOTT CO.—8-56

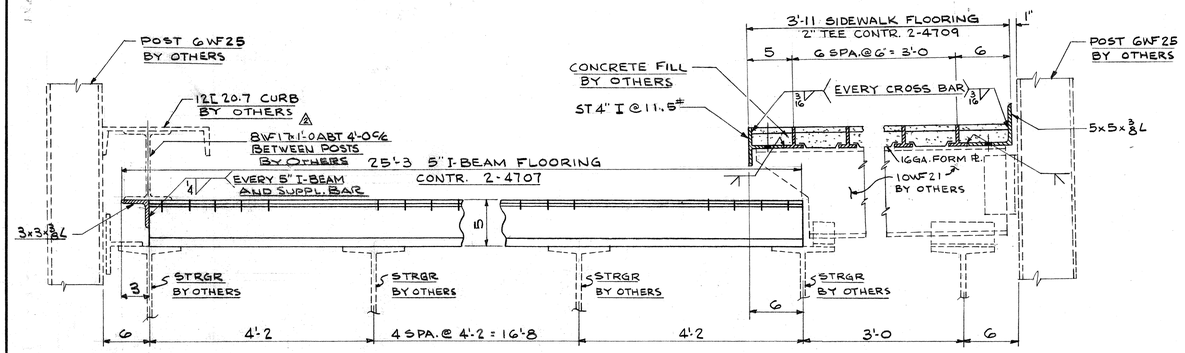

SECTION G-G

TYPICAL SECTION THRU 5" FLOORING & 2" SIDEWALK

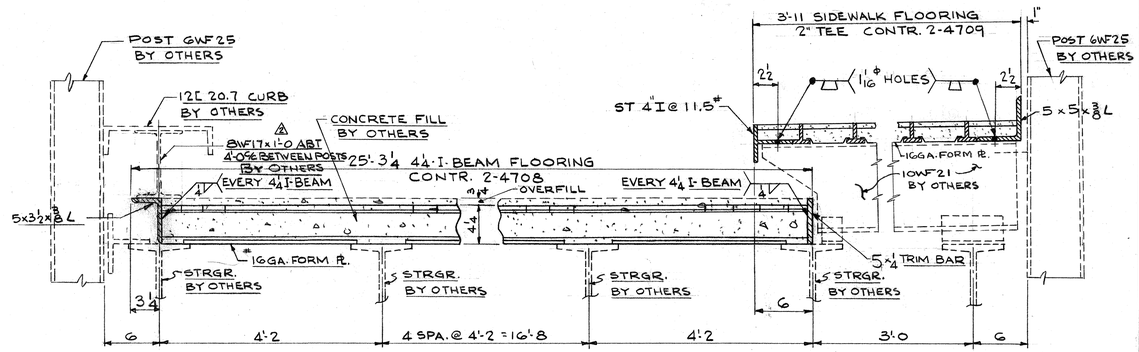

SECTION H-H

TYPICAL SECTION THRU 4 1/4 FLOORING & 2" SIDEWALK

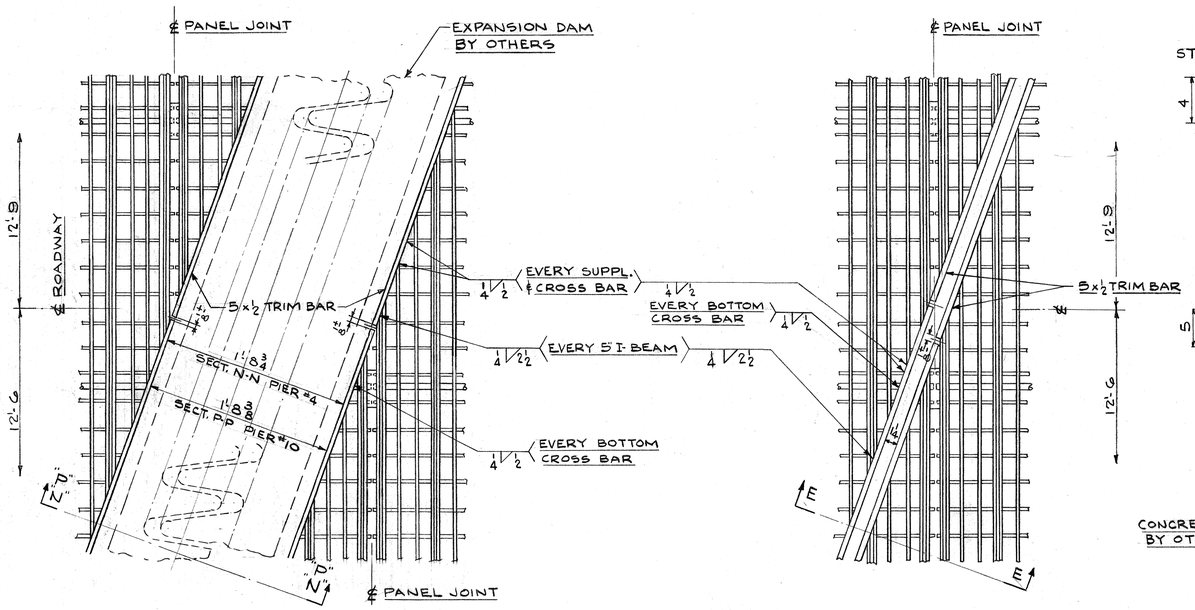

DETAIL "A"

EXPANSION JOINTS OF 5" I-BM. FLOORING

AT PIER #4 SECT. N-N

AT PIER #10 SECT. P-P

DETAIL "B"

EXPANSION JOINTS OF 5" I-BM FLOORING

AT PIERS #5, #6, #7, #8 & #9

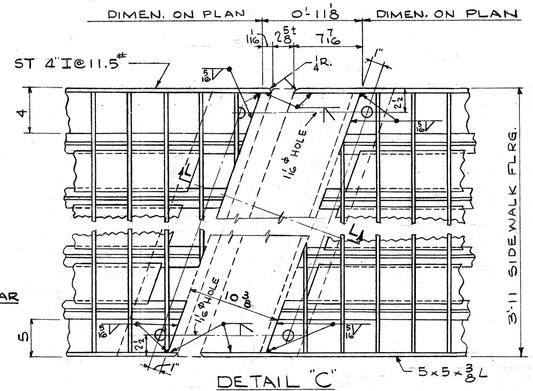

DETAIL "C"

EXPANSION JOINTS OF 2" TEE FLOORING

AT PIERS #4 & #10

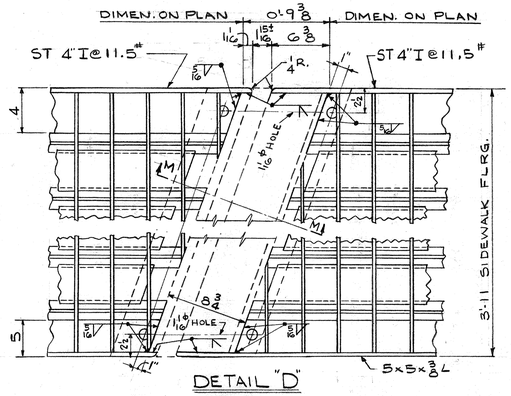

DETAIL "D"

EXPANSION JOINTS OF 2" TEE FLOORING

AT PIERS #5, #6, #7, #8 & #9

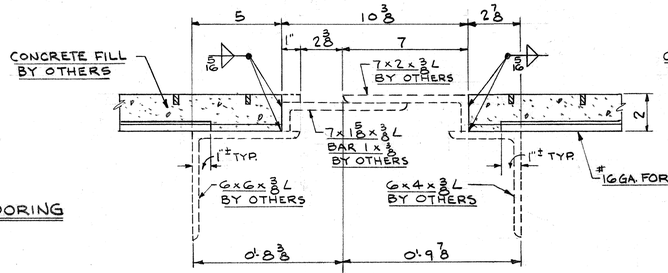

SECTION L-L

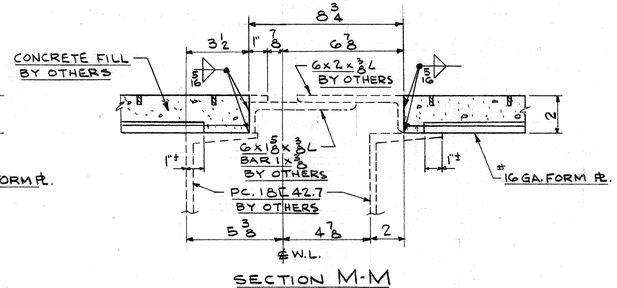

SECTION M-M

FOR ADDITIONAL NOTES SEE DWG. A119 SHEET #1

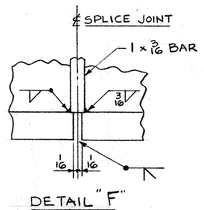

DETAIL "F"

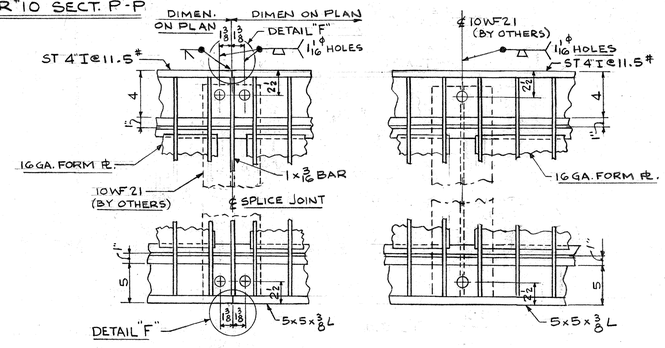

DETAIL "E"

NO.	REVISION	BY	DATE	NO.	REVISION	BY	DATE
1	REVISED AS PER CUST. APP. DWG. DATED 9-9-57	S.B.	9-16-57	1	ADD 3x3x3/8 L @ ONE END OF 5" FLOORING; ADD 5x3 1/2x3/8 L @ ONE END OF 4 1/4 FLOORING	H.A.S.	8-19-57

CUSTOMER: FERGUSON & EDMONDSON

ORDER NO. 4268

REFERENCE DRAWINGS: COMM. OF PENNA. DEPT. OF HIGHWAYS; DWGS. R-428 SH. 1 TO 12

RELIANCE STEEL PRODUCTS COMPANY

McKEESPORT, (PITTSBURGH DISTRICT) PA. BRIDGE DEPARTMENT

TITLE 5" I-BEAM WELDLOCK, 4 1/4 I-BEAM INTERLOCK & 2" TEE FLOORING

LOCATION ELLWOOD-KOPPEL BRIDGE, BEAVER COUNTY, PENNA.

DRAWN	J.F.T.	12-19-56	APPROVED BY
CHECKED	G.S.	1-24-57	
TRACED			

DWG. NO. A119 — 5 OF 5

CONTRACT NO. 2-4707, 2-4708, 2-4709

RD-18

#70312 ELLCO-YEL—B. K. ELLIOTT CO.—8-56

BEAVER RIVER BRIDGE

ELLWOOD & KOPPEL BRIDGE CO.

WHITE & WEIBEL ENGS. SCALES HOR. 1"=40 VER. 1"=10

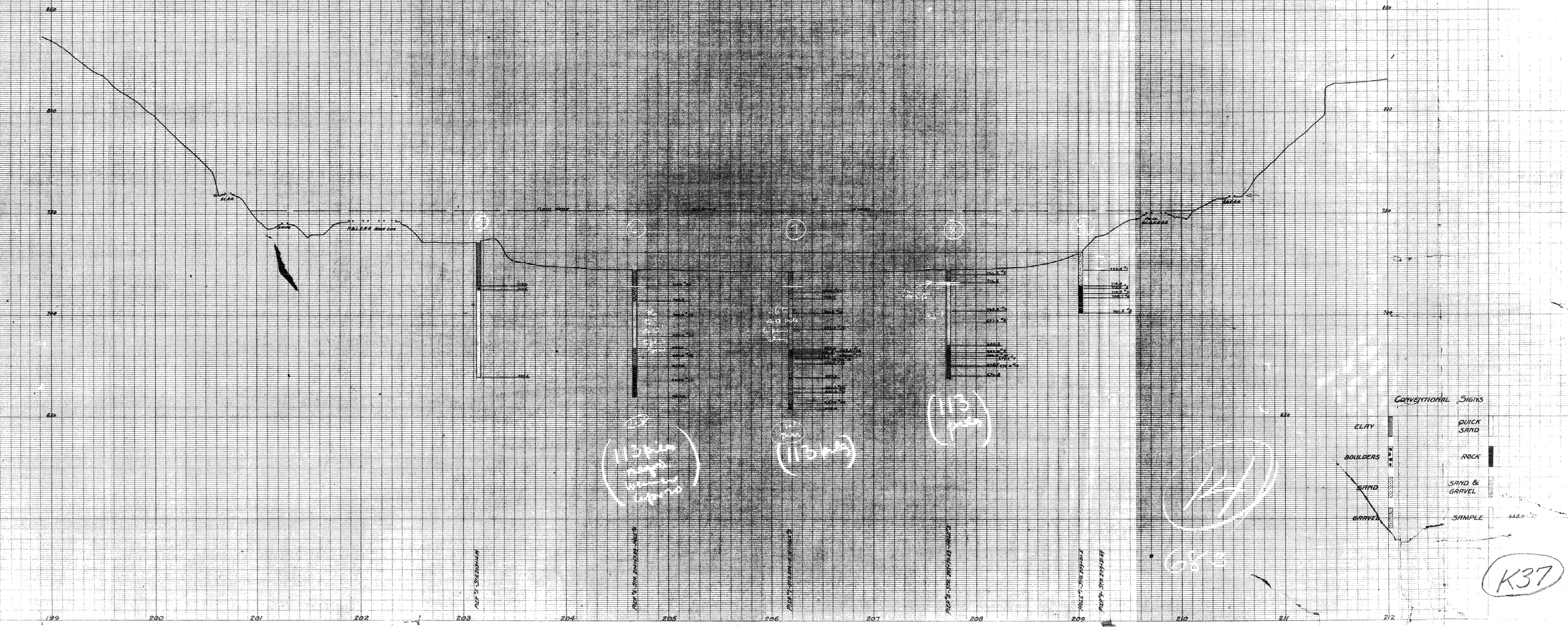

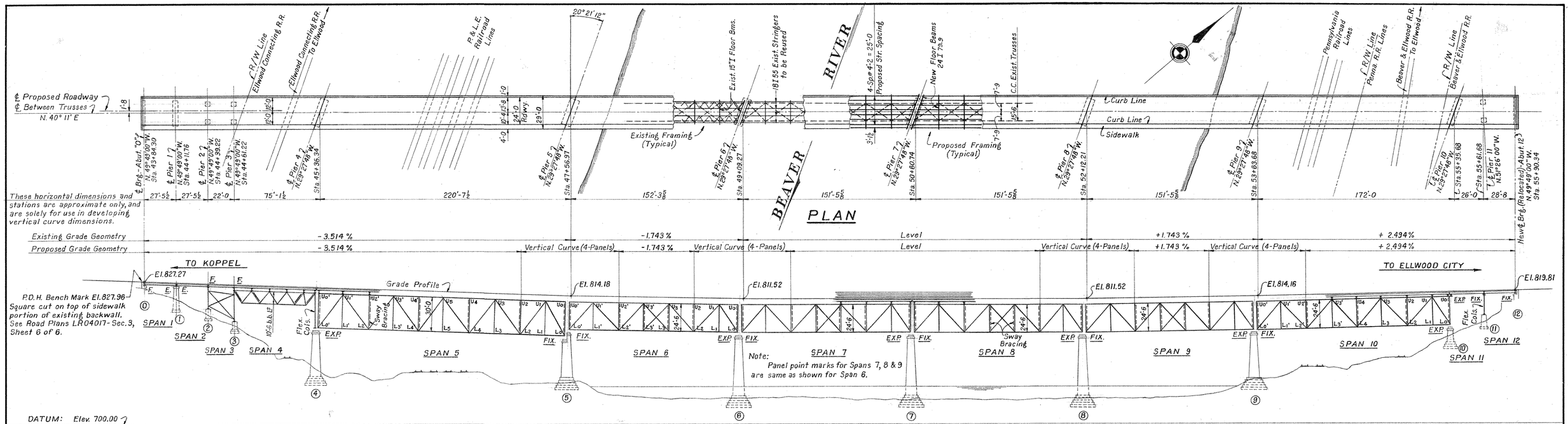

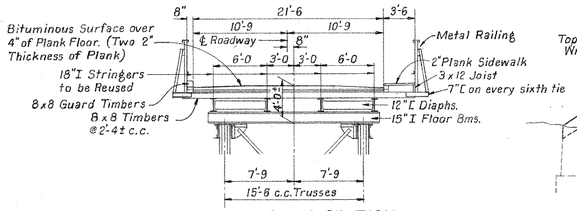

TYPICAL CROSS SECTION OF EXISTING STRUCTURE

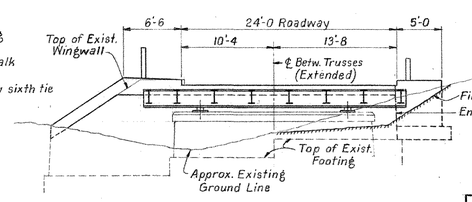

ELEVATION OF ABUTMENT "0"

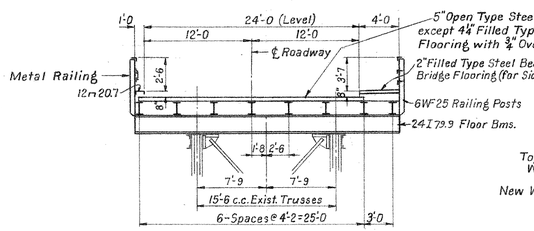

TYPICAL CROSS SECTION OF PROPOSED STRUCTURE

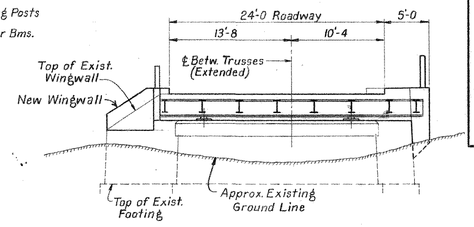

ELEVATION OF ABUTMENT "12"

ESTIMATE OF QUANTITIES			
ITEM NO.	DESCRIPTION	QUANTITY	UNIT
3	Class 2 Excavation	25	Cu. Yd.
~~23 a~~	(5") Open Type Steel Beam Bridge Flooring, Type 5 (Type 4 or 5)	25,350	Sq. Ft.
~~23 b~~	(4¼") Filled Type Steel Beam Bridge Flooring (with ¾" Over-fill). Type 1.	4,800	Sq. Ft.
~~23 c~~	(2") Filled Type Steel Beam Bridge Flooring, Type 3 (For Sidewalk)	4,630	Sq. Ft.
28	Class A Concrete (At Abutments)	15	Cu. Yd.
30	Reinforcement Bars	1,200	Lbs.
32	Fabricated Structural Steel	534,000	Lbs.
40 b	Removal of Portions of Existing Bridge Superstructure	———	Lump Sum
95	Roadway Railing	1,215	Lin. Ft.
96	Sidewalk Railing	1,215	Lin. Ft.
97	12" Curb Channel	1,210	Lin. Ft.
98	Cleaning and Painting of Existing Bridge Superstructure	———	Lump Sum

23b 23 23a

GENERAL NOTES

SPECIFICATIONS: Pennsylvania Department of Highways Form 408, 1954, and Form 409, 1949 supplemented by Specifications for Highway Bridges of the American Assoc. of State Highway Officials.

LIVE LOAD: H20-S16.

STEELWORK: See Steelwork General Notes, Sheet 2.

ABUTMENTS: Abutments shall be altered to suit new floor, sidewalk and shoes. See Sheets 11 and 12.

EXTENT OF WORK TO BE DONE: See Special Requirements and Sheet 2.

LIST OF SHEETS	
SHEET	DESCRIPTION
—	Title Sheet.
1	General Plan & Elevation, Quantities, Notes & List of Sheets.
2	Stress Sheet for Floor System, and Steelwork Notes.
3	Cross Section and Floor System Details for Truss Spans.
4	Cross Section and Floor System Details for Beam Spans.
5	Expansion Dams at Piers 4 & 10.
6	Expansion Dams at Piers 5, 6, 7, 8 & 9
7	Bottom Lateral Replacement & Truss Reinforcement - Span 4.
8	Bottom Lateral Replacement - Span 5.
9	Bottom Lateral Replacement - Spans 6, 7, 8, 9 & 10.
10	Shoe Repairs and Replacement.
11	Railing Post Plan, and Steel Details at Abutments
12	Alteration of Abutments "0" and "12"

For Bar Types and Bending Diagrams see Sheet 1, Pa. State Hwy. Dwg. No. S-1894.

APPROVED May 14, 1956.
BRIDGE ENGINEER

PUBLIC UTILITIES

PENNSYLVANIA RAILROAD
PITTSBURGH & LAKE ERIE RAILROAD

Pennsylvania Station Pgh. Pa.
Smithfield & W. Garson Sts. Pgh. Pa.

6-25-56 Rev. for Item numbers.

Commonwealth of Pennsylvania
Department of Highways
BRIDGE UNIT

L.R. 04017-4 BEAVER COUNTY
RECONSTRUCTION OF
ELLWOOD - KOPPEL BRIDGE
OVER BEAVER RIVER
GENERAL PLAN & ELEVATION
GENERAL NOTES; QUANTITIES & LIST OF SHEETS

SCALE: 1" = 40' & ⅛" = 1'-0
DATE: JAN., 1956
SHEET 1 OF 12 DWG. NO. R-428

Note:-
For Span 3 turn existing stringers "E2" end for end so that uncut flange of 18"I will bear on "F2" at Pier 3.

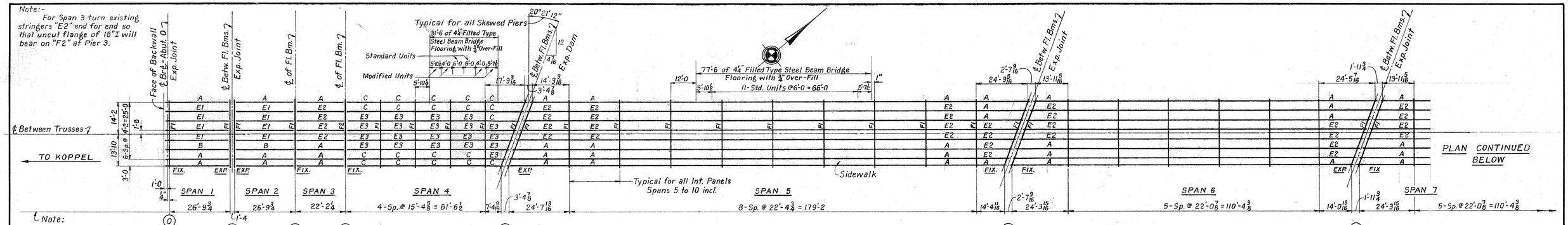

Note:
Dimensions on this line are c.c. of floor beams measured along grade at the bottoms of relocated exterior stringers. (For this purpose all stringers were assumed to be 18" beams)
Dimensions between ends of spans have been adjusted to 55°F. normal temperature.

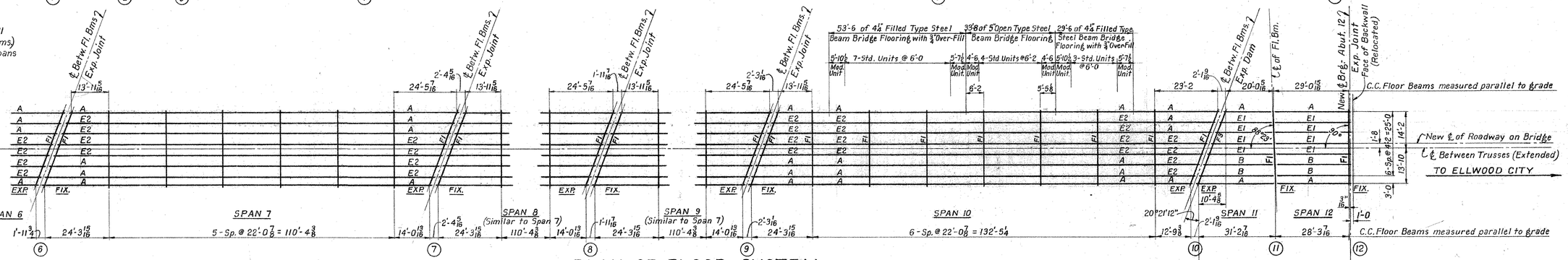

PLAN OF FLOOR SYSTEM

Scale: 1"= 20'

Note:-
For diaphragms, not shown on PLAN, see Sheet 3.
For location of railing posts see Sheet 11.
Bridge deck shall be 5" Open Type Steel Beam Bridge Flooring, except at areas indicated on the Plan above where 4¼" Filled Type Steel Beam Bridge Flooring with ¾" Over-fill shall be provided.

Note:-
Stringers in all spans shall be parallel to "℄ Between Trusses."

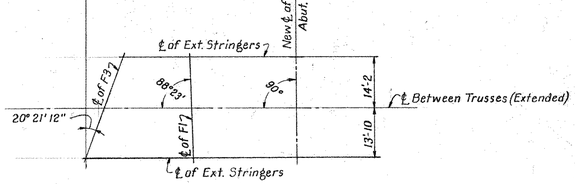

GEOMETRY FOR SPANS 11 & 12

FLOOR SYSTEM SCHEDULE

MARK	R (kips) D.	R (kips) L.	R (kips) I.	R (kips) TOTAL	M (ft. kips) D.	M (ft. kips) L.	M (ft. kips) I.	M (ft. kips) TOTAL	MAX. SHEAR (kips)	SECTION	NET S.M. ($in.^3$)	MAX. UNIT BENDING STRESS ALLOWABLE (kips/sq.in.)	MAX. UNIT BENDING STRESS ACTUAL (kips/sq.in.)	MAX. UNIT SHEARING STRESS ALLOWABLE (kips/sq.in.)	MAX. UNIT SHEARING STRESS ACTUAL (kips/sq.in.)
A	1.5	18.7	5.6	25.8	18.8	82.5	24.8	126.1	25.8	18WF50	89.0	18.0	17.0	11.0	4.0
B	2.0	20.2	6.1	28.3	19.5	110.2	27.1	156.8	28.3	18WF60	107.8	18.0	17.5	11.0	3.7
C	2.3	15.4	4.6	22.3	15.1	55.0	16.5	86.6	22.2	15I 42.9	58.9	18.0	17.6	11.0	3.7
E1	2.2	20.1	6.0	28.3	15.9	107.0	32.1	155.0	28.3	20I 80	144.9	18.0	12.9	11.0	2.4
E2	3.7	18.4	5.5	27.6	20.7	74.6	22.4	117.7	27.6	18I 55	88.4	18.0	16.0	11.0	3.3
E3	2.5	14.5	4.4	21.4	9.5	51.5	15.5	76.5	21.4	15I 42	57.3	18.0	16.1	11.0	3.8
F1	18.6	86.3	25.9	130.8	46.0	142.0	42.6	230.6	88.3	24I 79.9	173.9	18.0	15.9	11.0	7.4
F2	11.2	71.1	21.3	103.6	-11.7	146.8	44.0	+179.1	68.4	21WF62	126.4	18.0	17.0	11.0	8.2
F3	8.0	70.8	21.2	100.0	-7.0	146.0	44.0	+183.0	67.0	18WF70	128.2	18.0	17.1	11.0	8.5

Note: Stringers E1, E2 & E3 are Existing Stringers.

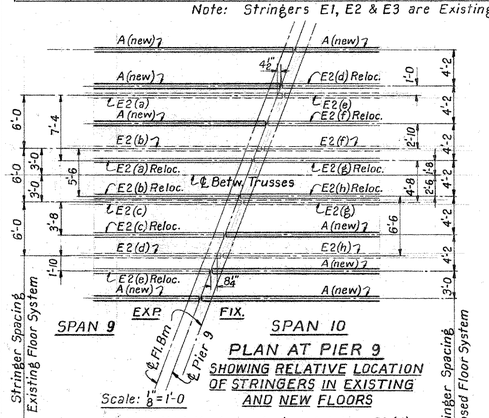

PLAN AT PIER 9
SHOWING RELATIVE LOCATION OF STRINGERS IN EXISTING AND NEW FLOORS
Scale: ½"= 1'-0

Note that the two exterior stringers E2(d) and E2(e) must be interchanged due to the small projection at ends of fixed stringers. Otherwise E2(e), Span 10, would be too short to reach new 12℄ diaph. when moved outward 1'-0. See Detail "A".
Similar conditions will occur at Piers 5 to 8 incl.

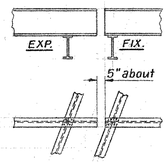

DETAIL "A"
TYPICAL EXISTING END STRINGERS
Scale: 4"= 1'-0

Note:-
Drill holes in bottom flange of existing stringers in skewed panels to fit new floor beams.

STEELWORK GENERAL NOTES

SHOP DETAIL DRAWINGS: Original shop and erection drawings cannot be located. Therefore, any necessary dimensions not given on the Contract Plans must be obtained in the field.

GENERAL OUTLINE OF WORK TO BE DONE:
1. All bottom laterals, except end struts, shall be replaced as shown and noted on Sheets 1, 7, 8 and 9.
2. The existing floor, floor system, sidewalk and railing shall be replaced, except that the four lines of existing stringers are to be salvaged and reused. See Sheets 1, 2, 3 and 4. The top lateral systems of the truss spans are ineffective with any intermediate floor beam removed. Hence, to keep the top laterals effective, a temporary strut must be used to replace any floor beam removed, until such time as the new floor beam is erected and welded in place.
3. Vertical trusses of Span 4 shall be reinforced as shown and noted on Sheet 7.
4. Lower parts of expansion shoes for Spans 5 to 10 incl. shall be replaced and repaired as shown on Sheet 10.
5. Shoes at Abutments "0" and "12", and Piers "1" and "11" shall be replaced. See Sheets 4 and 10.
6. New expansion dams and joints shall be provided at points shown on Sheet 2.

MATERIAL: All material shall be Structural Carbon Steel, except for bronze plates as noted on the details.

VERTICAL ADJUSTMENT: In general, the tops of stringers shall be brought to the required vertical alignment of roadway by placing steel shims between bottom of stringers and top of floor beams. Over Piers 2 and 11, where stringers frame to webs of new floor beams, shims as required for vertical alignment shall be inserted between the bottom of floor beam and the sole plates at the bearings. At the abutments, and over Pier 1 the vertical adjustment shall be obtained by varying the depth of grout.

STRINGERS: Existing stringers in end panels adjacent to expansion dams and joints shall be accurately flame cut to length in field, with ends beveled and aligned for welding to the transverse ℄.

RAILING: The wheel guard and sidewalk joists shall be placed in correct lateral alignment before welding to stringers. The railing shall then be placed in correct lateral alignment by means of the adjustment shims provided at bottom of railing posts. Railing posts shall be set vertical.

PAINTING: See Special Requirements.

Commonwealth of Pennsylvania
Department of Highways
BRIDGE UNIT

L.R. 04017-4 BEAVER COUNTY
RECONSTRUCTION OF
ELLWOOD-KOPPEL BRIDGE
OVER BEAVER RIVER
STRESS SHEET FOR FLOOR SYSTEM AND STEELWORK NOTES

APPROVED May 14, 1956
BRIDGE ENGINEER

SCALE: AS NOTED
DATE: JAN., 1956
SHEET 2 OF 12
DWG. NO. R-428

NO. 124

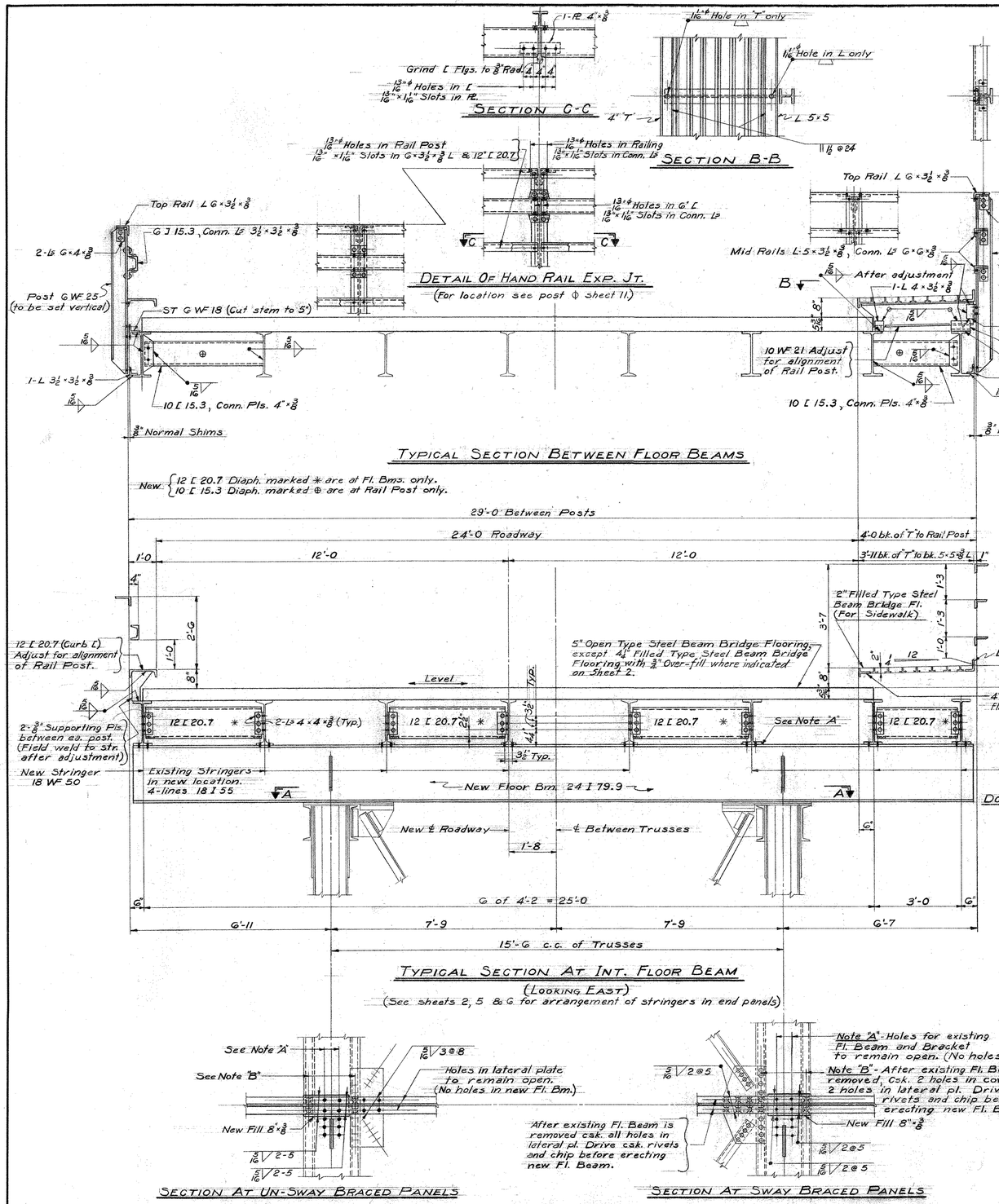

RIVETS AND BOLTS:
All rivets shown on this sheet are ¾" dia. Use ¾"ø Button Head Bolts for field connecting railing, railing posts, and guard L's - check threads after erection.

RAILING POSTS SPACING:
See sheet 11.

NOTE "A":
Provide adjustment shims between bottom of stringers and floor beam to bring tops of stringers and steel flooring to the required vertical alignment of roadway. (¼" Normal shims, except on vertical curves and as otherwise noted.)

FLOOR BEAMS AND SIDEWALK JOISTS:
Shall be set normal to grade and normal to top chords of trusses.

STRINGERS:
Shall be parallel to grade, except that on the vertical curves stringers shall be chords to the curve. New stringers shall be fabricated with mill camber turned up.

RAILING POSTS:
Shall be vertical.

Commonwealth of Pennsylvania

Department of Highways
BRIDGE UNIT

L.R. 04017-4 BEAVER COUNTY

RECONSTRUCTION OF
ELLWOOD-KOPPEL BRIDGE
OVER BEAVER RIVER

CROSS SECTION & FLOOR SYSTEM DETAILS FOR TRUSS SPANS

APPROVED May 14, 1956.
BRIDGE ENGINEER

SCALE: ½" = 1'-0" UNLESS NOTED.
DATE: JAN., 1956
SHEET 3 OF 12 DWG. NO. R-428

PUB NO. 124

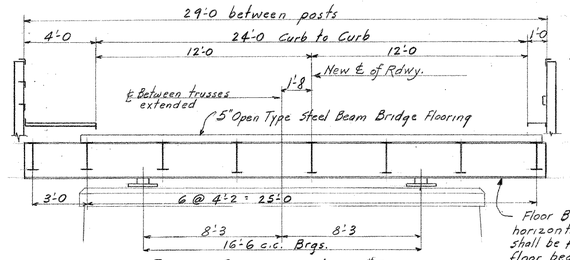

FLOOR BEAM AT ABUT. #0
LOOKING WEST
SCALE - 4" = 1'-0

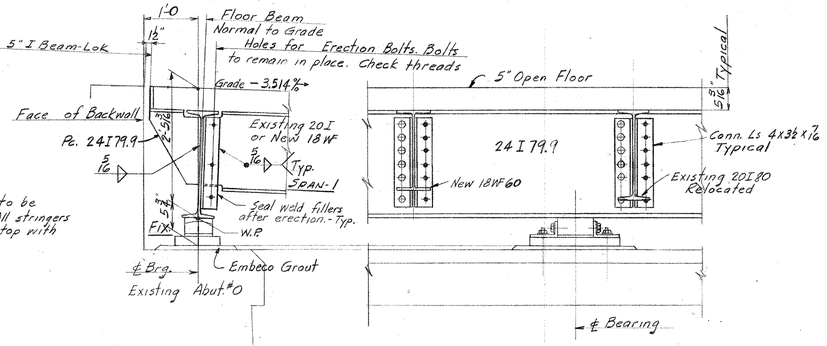

TYPICAL DETAILS AT ABUT. #0
For details of shoes see Sheet 10.

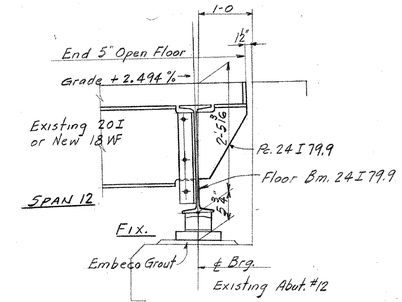

TYPICAL DETAILS AT ABUT. #12
Details not shown are similar to those shown for Abut. #0.

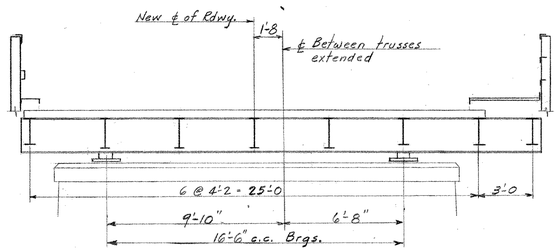

FLOOR BEAM AT ABUT. #12
LOOKING EAST
SCALE - 4" = 1'-0

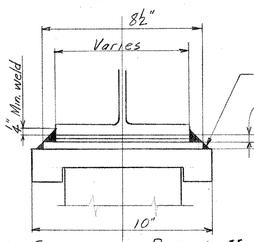

ENLARGED DETAIL X
PIER 10

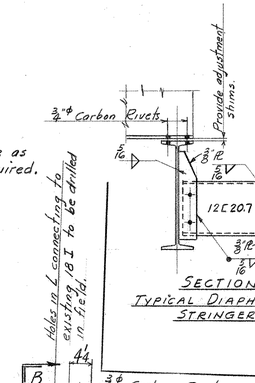

SECTION D
TYPICAL DIAPHRAGM AT STRINGERS

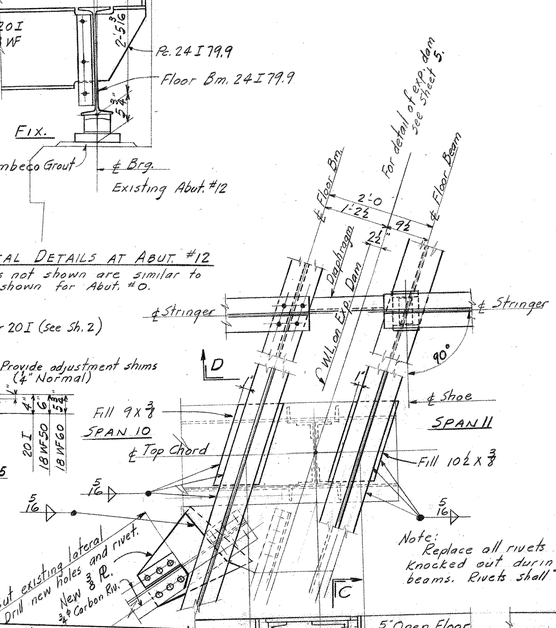

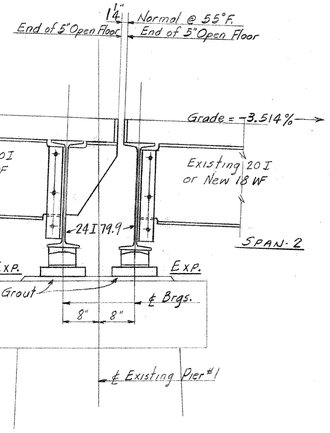

TYPICAL DETAILS AT PIER #1
Details not shown are similar to those shown for Abut. #0.
For details of shoes see Sheet 10.

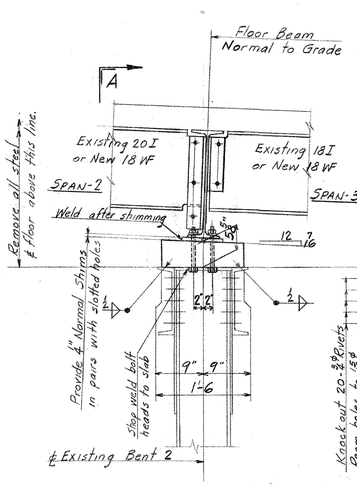

SECTION A

TYPICAL DETAILS AT PIER #2
DETAILS AT PIER #11 - SIMILAR
Details not shown are similar to those shown for Abut. #0.

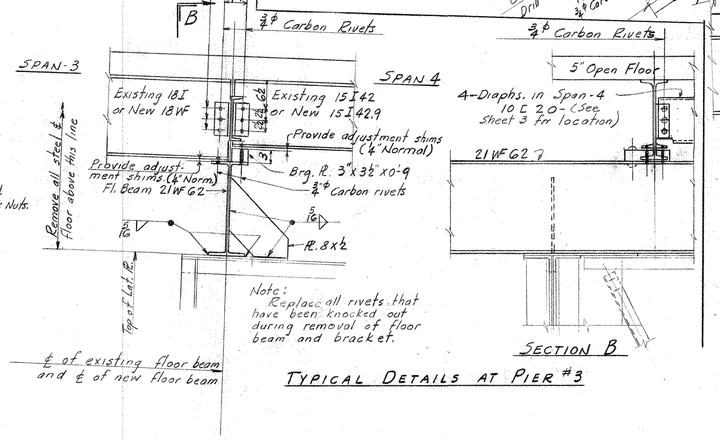

TYPICAL DETAILS AT PIER #3

SECTION B

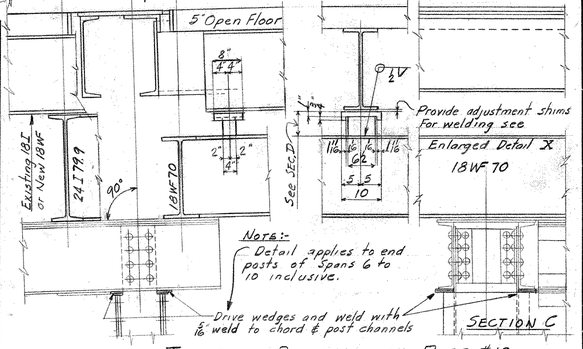

TYPICAL DETAILS AT PIER #10

Commonwealth of Pennsylvania

Department of Highways
BRIDGE UNIT

L.R. 04017-4 BEAVER COUNTY

RECONSTRUCTION OF
ELLWOOD-KOPPEL BRIDGE
OVER BEAVER RIVER

CROSS SECTIONS & FLOOR SYSTEM DETAILS FOR BEAM SPANS

NOTES:
MATERIAL:- All material shall be Structural Carbon Steel.
RIVETS:- ⅞" ϕ Carbon Steel unless noted.
WELDING:- All welding shall conform to the current Specs. for Welded Highway and Railway Bridges of the American Welding Society.
GENERAL NOTES:- See sheets 1 and 2

APPROVED May 14 1956
BRIDGE ENGINEER

SCALE: ¾"=1'-0, Unless Noted
DATE: JAN., 1956
SHEET 4 OF 12 DWG. NO. R-428

Note:
All 18I55 or 15I42 are existing beams in new location.
All 18 WF 50 or 15I42.9 are new.

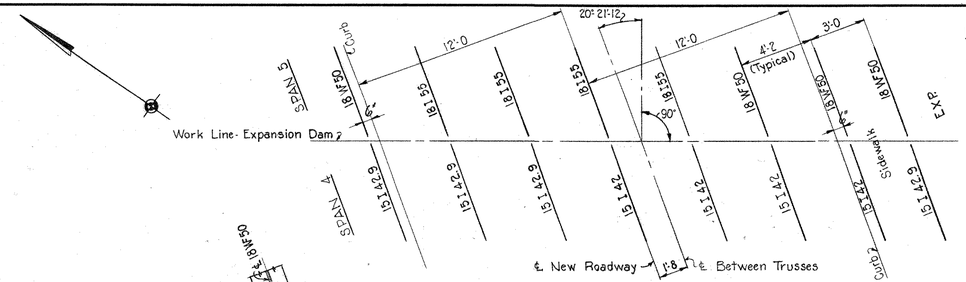

KEY PLAN SHOWING STRINGERS AT EXPANSION JOINT
PIER 4
Scale: 1/4" = 1'-0

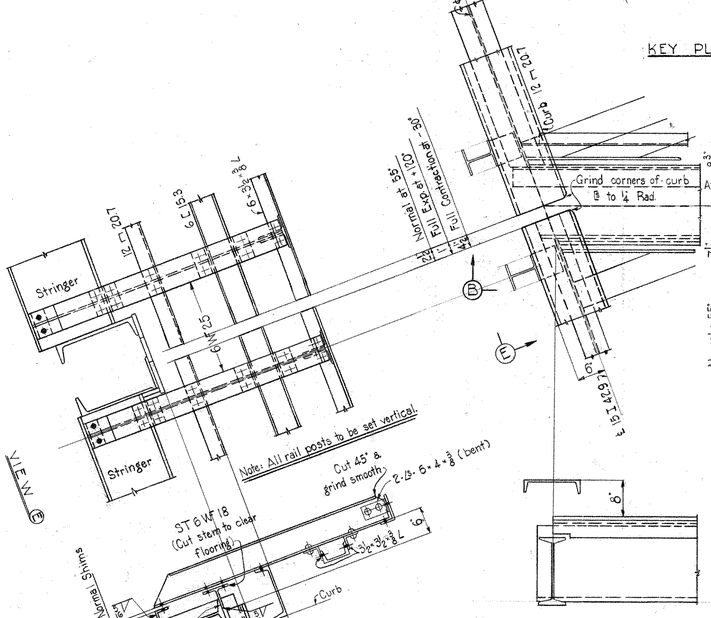

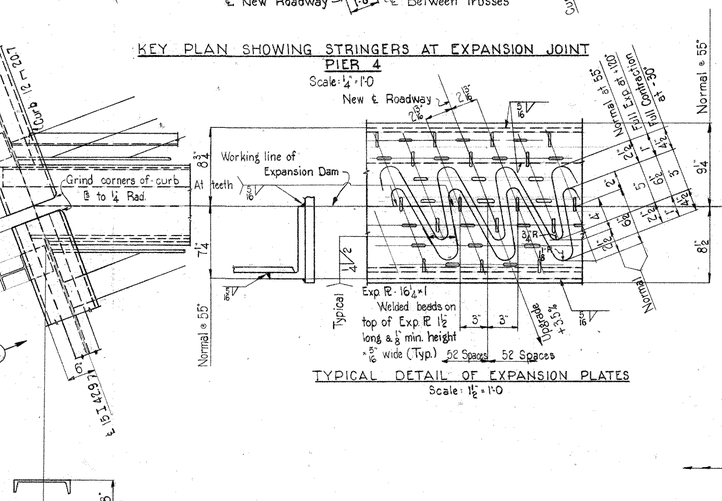

TYPICAL DETAIL OF EXPANSION PLATES
Scale: 1½" = 1'-0

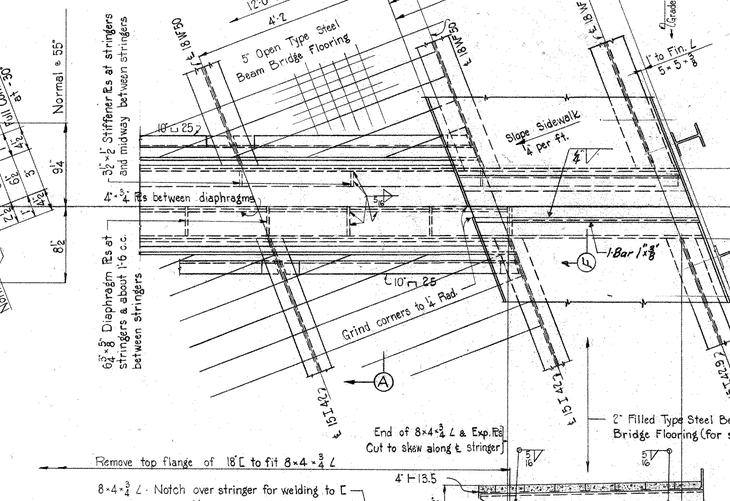

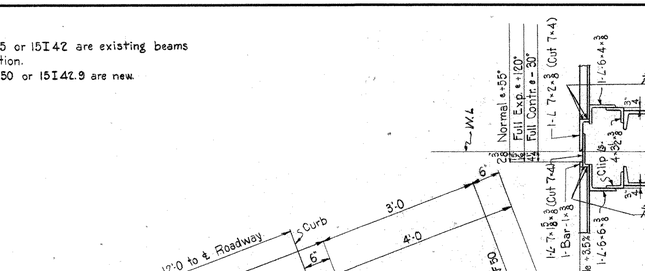

Note:
Cut existing stringers in the field to exact length along this line and bevel the ends for welding

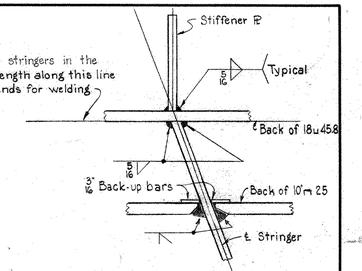

SECT (D)
Scale: 3"=1'-0
(Showing typical welds for ℄ to stringers)

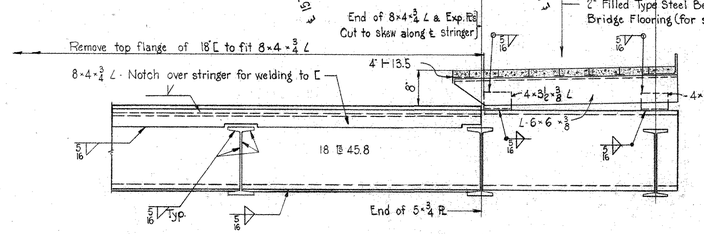

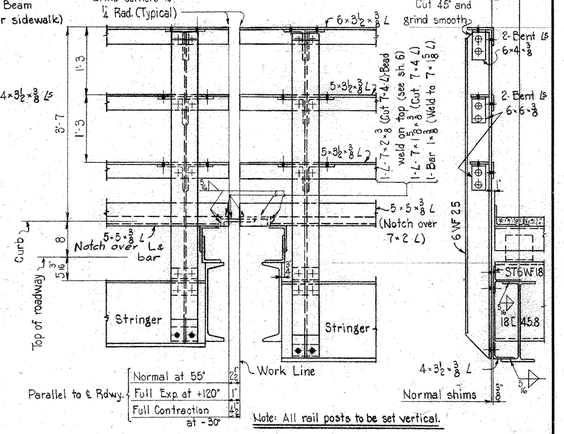

VIEW (C)

SECTION (B)(E)

EXPANSION JOINT AT PIER 4

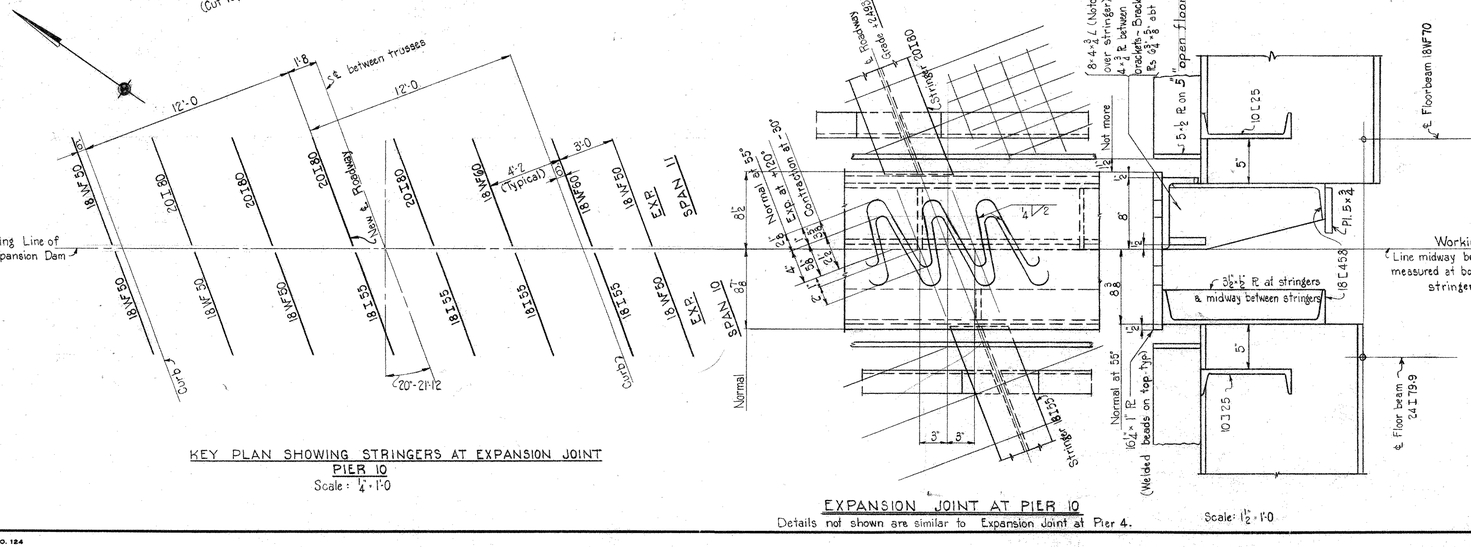

KEY PLAN SHOWING STRINGERS AT EXPANSION JOINT
PIER 10
Scale: 1/4" = 1'-0

EXPANSION JOINT AT PIER 10
Details not shown are similar to Expansion Joint at Pier 4.
Scale: 1½" = 1'-0

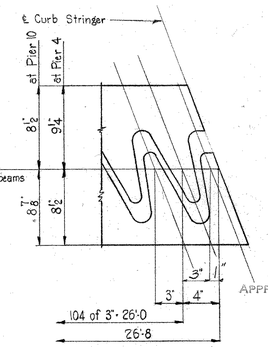

TYPICAL DETAIL OF EXPANSION PLATE AT CURB STRINGERS

Commonwealth of Pennsylvania

Department of Highways
BRIDGE UNIT

L.R. 04017-4 BEAVER COUNTY
RECONSTRUCTION OF
ELLWOOD-KOPPEL BRIDGE
OVER BEAVER RIVER

EXPANSION DAMS AT PIERS 4 & 10

APPROVED May 14, 1956
BRIDGE ENGINEER

SCALE: ¾" = 1'-0, Unless Noted
DATE: JAN., 1956
SHEET 5 OF 12 DWG. NO. R-428

PRD NO. 124

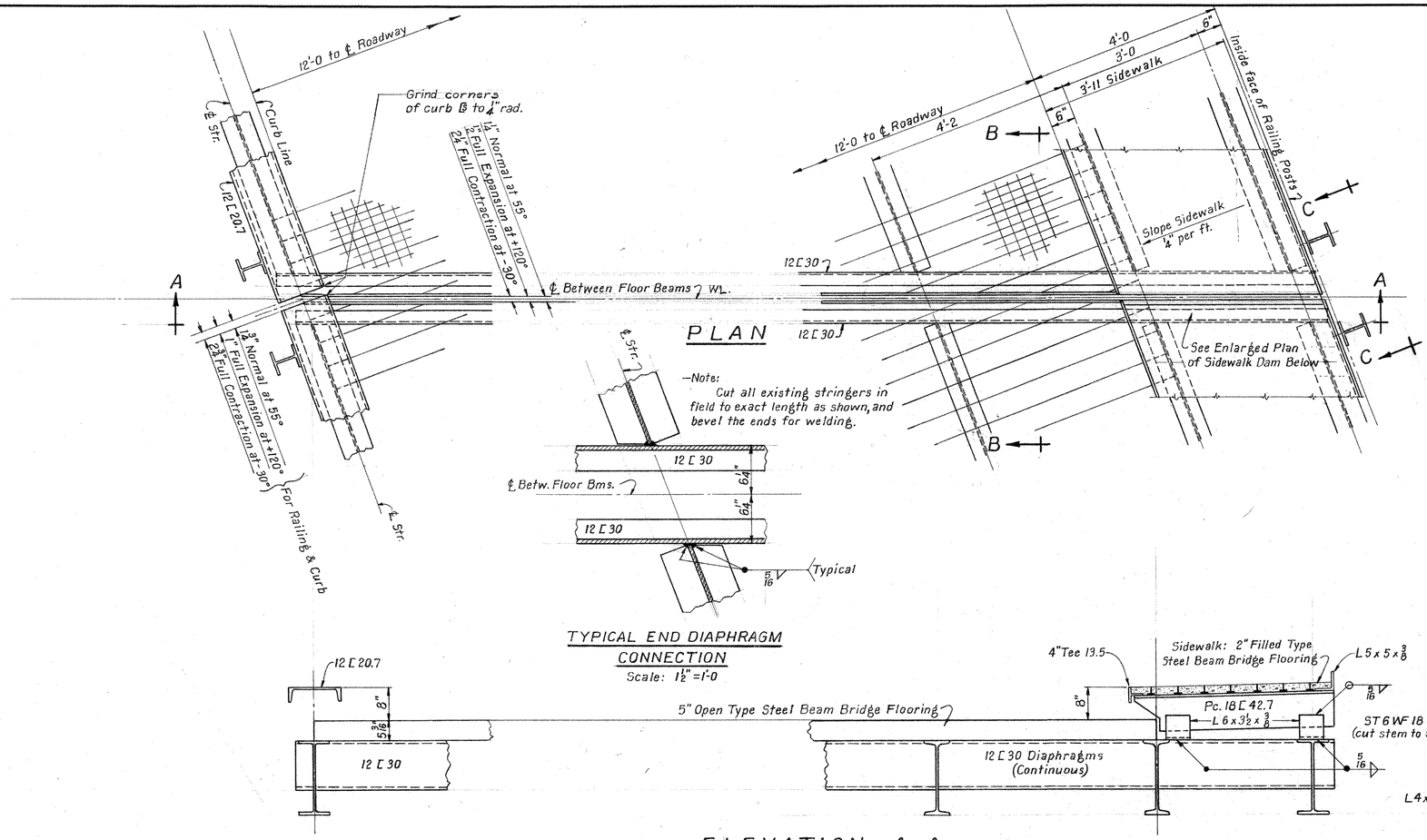

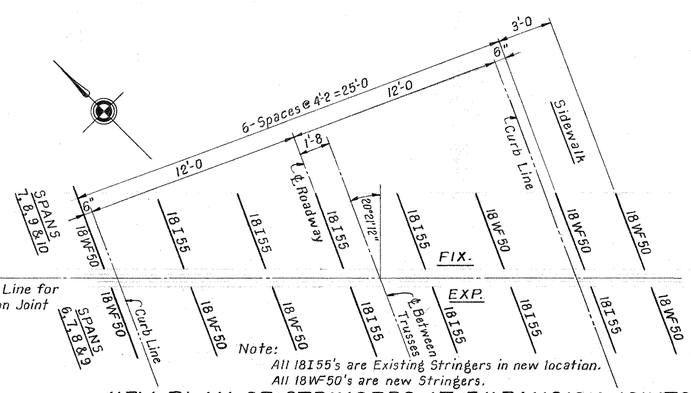

KEY PLAN OF STRINGERS AT EXPANSION JOINTS AT PIERS 5,6,7,8 & 9

Note:- Joint at Pier 1, Similar

Scale: 4"=1'-0

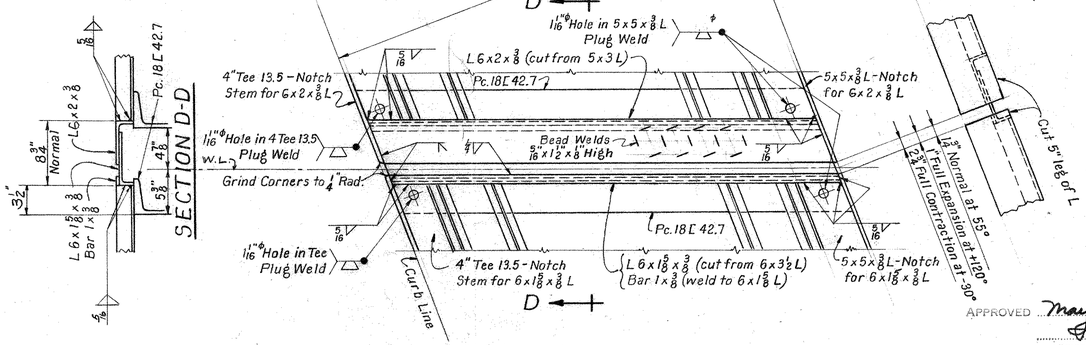

TYPICAL EXPANSION JOINT DETAILS AT SIDEWALK

Scale: 1½"=1'-0

Commonwealth of Pennsylvania

Department of Highways

BRIDGE UNIT

L.R. 04017-4 BEAVER COUNTY

RECONSTRUCTION OF

ELLWOOD - KOPPEL BRIDGE

OVER BEAVER RIVER

APPROVED May 14, 1956. EXPANSION JOINTS AT PIERS 5, 6, 7, 8 & 9

BRIDGE ENGINEER

SCALE: ¾"=1'-0, Unless Noted

DATE: JAN., 1956

SHEET 6 OF 12 DWG. NO. R-428

PRD NO. 124

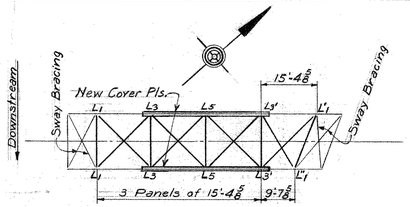

DIAGRAM OF BOTTOM LATERALS

BOTTOM CHORD REINFORCING

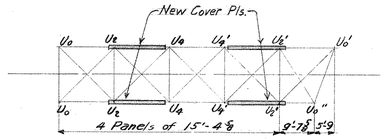

DIAGRAM OF TOP CHORD REINFORCING

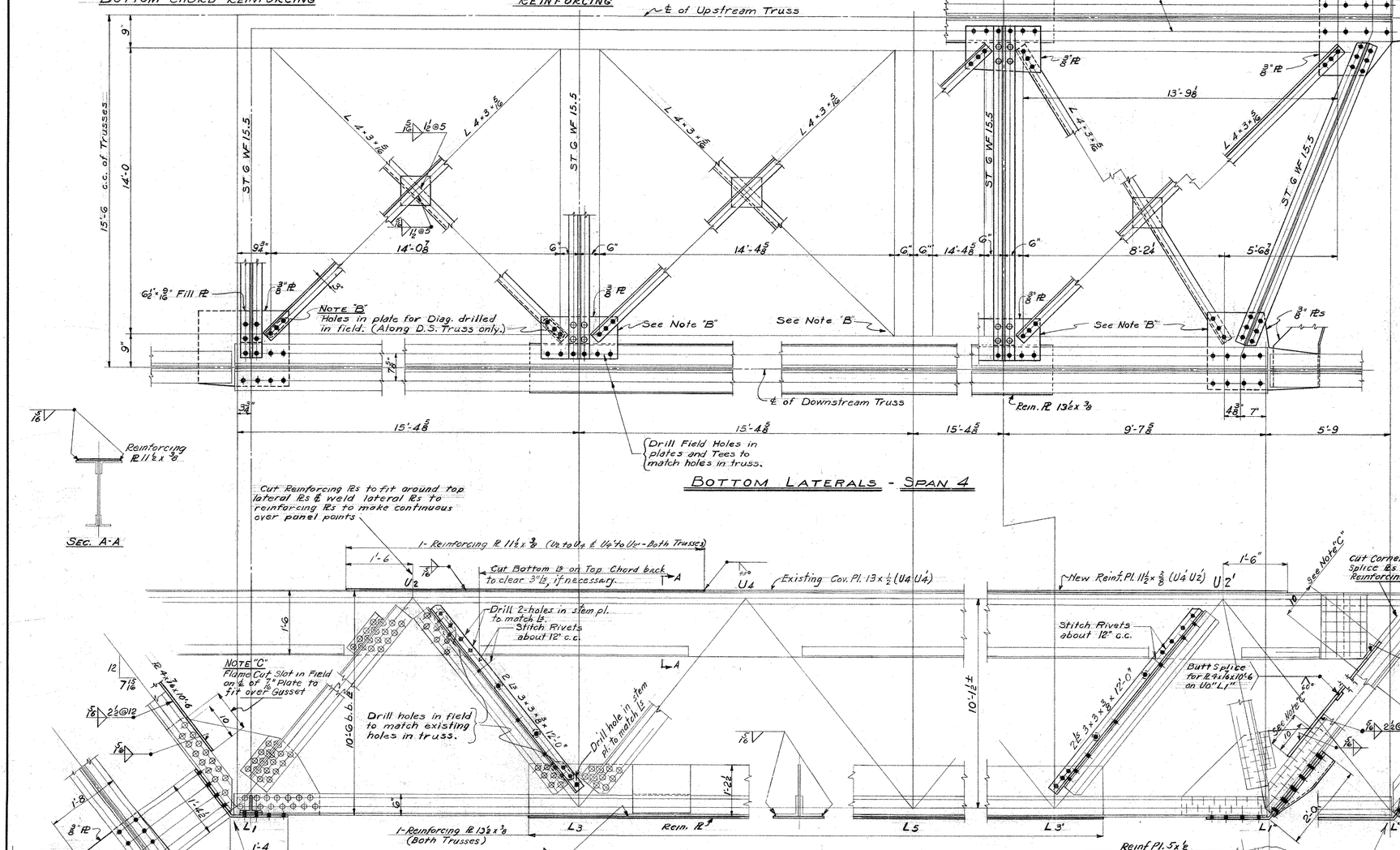

BOTTOM LATERALS - SPAN 4

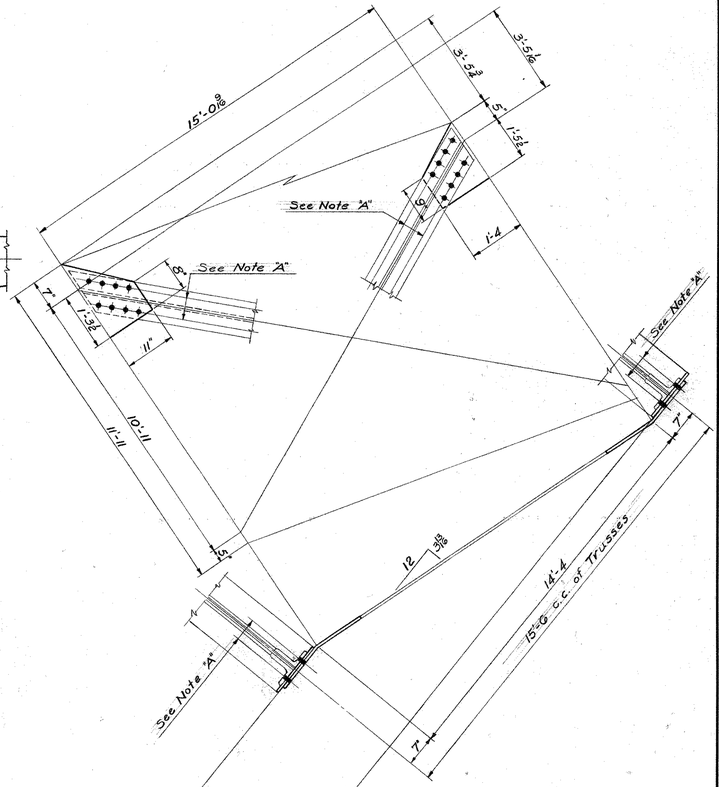

ELEVATION OF TRUSSES - SPAN 4

WORK TO BE DONE

1. Replace Bottom Lateral System as shown and noted. Remove the laterals by cutting out the rivets that connect lateral plates to bottom chords.
   Remove bent plates at L1, L1' & L1" by cutting out rivets that connect them to end bracing and truss members.
   Drill field holes in lateral angles by a method to insure ⅜ of drawn in each lateral.
2. Reinforce both Trusses as shown and noted on "ELEVATION". This reinforcement must be done while the old timber deck, railing, and stringers are removed, but with the floor beams in place.
   Members to be reinforced are U2 U4, U2'U4', L3 L3', U0 L1, U2 L3, and U2' L3' - both trusses; also U0' L1' and U0" L1".

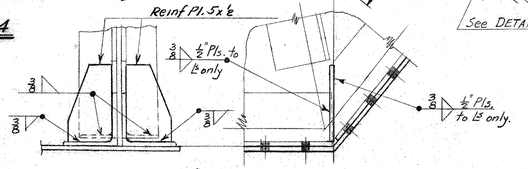

DETAIL "D" Scale: 1½" = 1'-0"

Use this detail to reinforce all four Joints L1, L1', & L1". Do not weld the ½" Pls. to the truss gussets.

RIVETS - ¾" ϕ

Commonwealth of Pennsylvania

Department of Highways

BRIDGE UNIT

L.R. 04017-4 BEAVER COUNTY

RECONSTRUCTION OF ELLWOOD-KOPPEL BRIDGE OVER BEAVER RIVER

BOTTOM LATERAL REPLACEMENT AND TRUSS REINFORCEMENT SPAN 4

APPROVED May 14, 1956.
BRIDGE ENGINEER

SCALE: ¾" = 1'-0 UNLESS NOTED

DATE: JAN., 1956

SHEET 7 OF 12 DWG. NO. R-428

PRD NO. 124

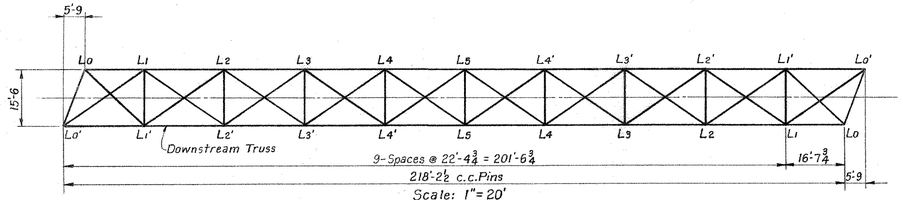

Scale: 1"=20'

Cut Existing L to r (Typical)

Note:
Welding of plates to upstream truss is same as shown for downstream truss.

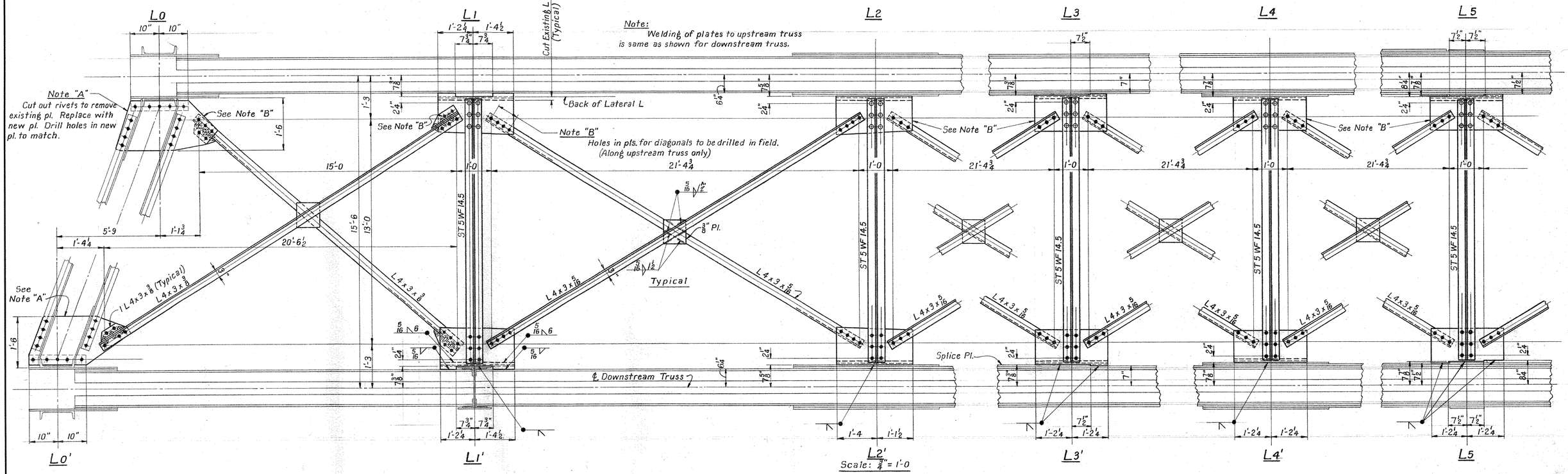

Scale: ¾"= 1'-0

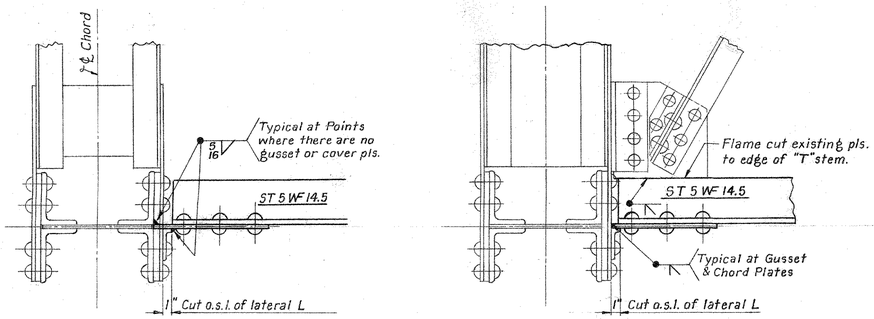

TYPICAL SECTIONS SHOWING PROPOSED CONNECTIONS OF BOTTOM LATERAL PLATES & STRUTS

Scale: 1½"=1'-0

GENERAL PROCEDURE

Cut outstanding leg of connection angles parallel to and one inch (1") from back of other leg.

Remove old lateral bracing.

Remove old lateral plates at end struts by cutting out rivets indicated.

Connect new lateral plates to end struts and drill holes in plate to match holes in strut and gusset connection.

Center new struts on panel points as accurately as possible and weld new lateral plates to gussets and cover plates as indicated.

Drill field holes in lateral plates to insure ⅛" draw in diagonals. See Note "B".

All lateral plates are ⅜" thick.

Rivets, ¾"ϕ

Commonwealth of Pennsylvania

Department of Highways
BRIDGE UNIT

L.R. 04017-4 BEAVER COUNTY

RECONSTRUCTION OF
ELLWOOD – KOPPEL BRIDGE
OVER BEAVER RIVER

APPROVED May 14, 1956, BOTTOM LATERAL REPLACEMENT
SPAN 5

A. S. Porter
BRIDGE ENGINEER

SCALE: AS NOTED
DATE: JAN., 1956
SHEET 8 OF 12

DWG. NO. R-428

PRD NO. 124

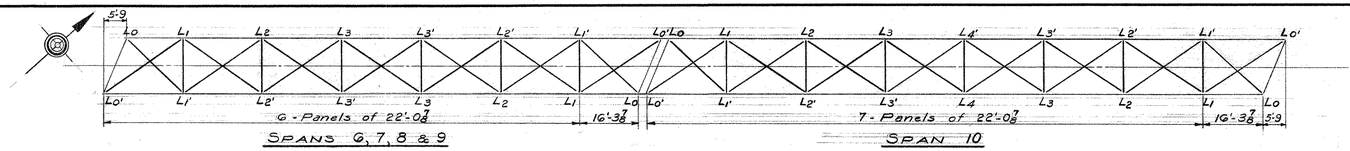

SPANS 6, 7, 8 & 9 — SPAN 10

DIAGRAM OF BOTTOM LATERALS

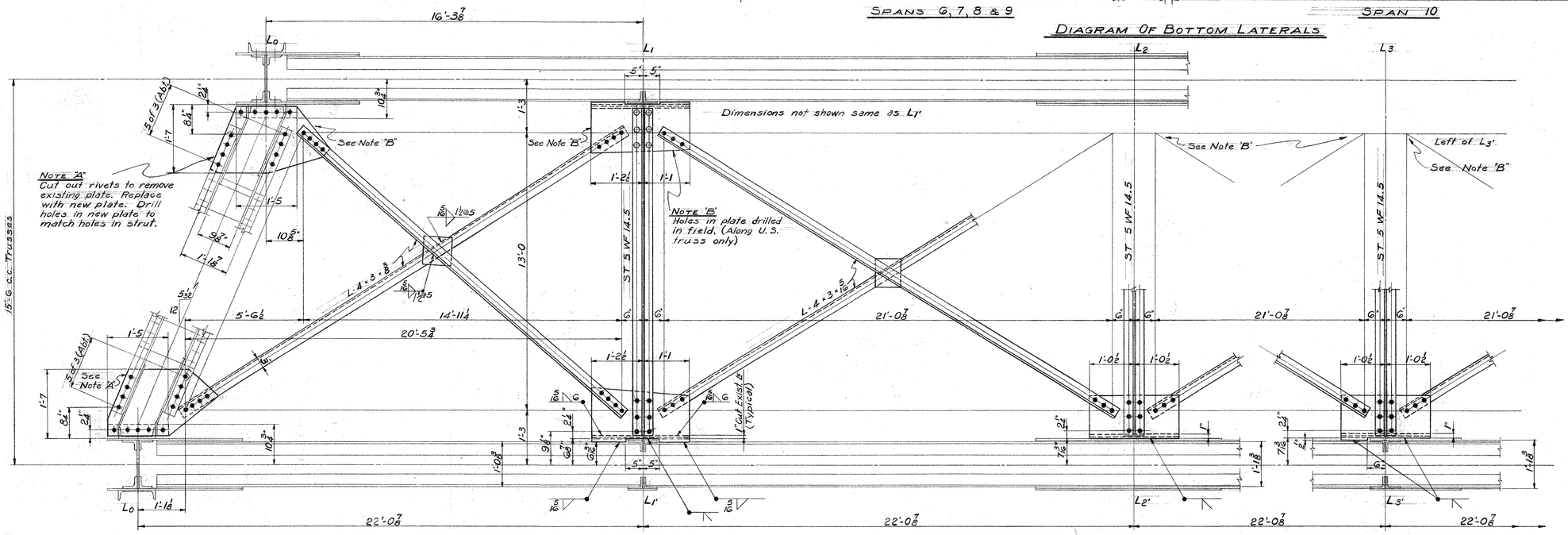

BOTTOM LATERALS - SPANS 6, 7, 8 & 9

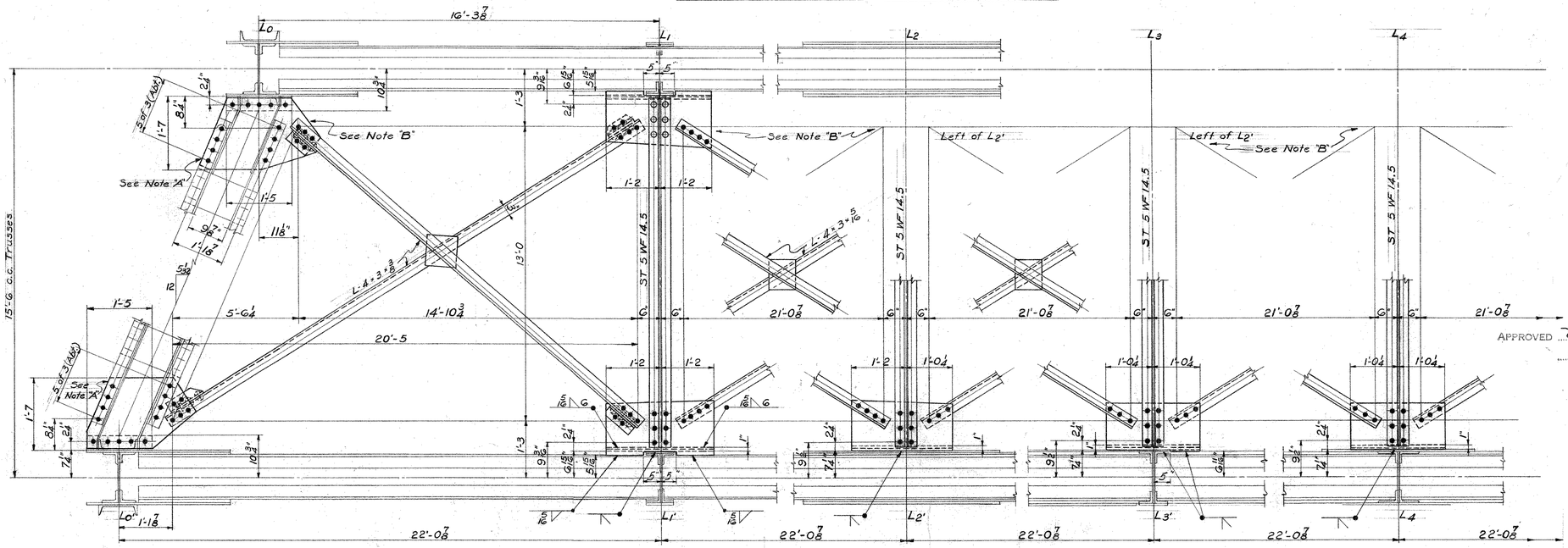

BOTTOM LATERALS - SPAN 10

NOTES

See sheet 8 for General Procedure and typical sections showing welding of lateral plates to lower chords, and struts to sway bracing.

Rivets - 3/4"ϕ

APPROVED May 14, 1956. Commonwealth of Pennsylvania
L. A. Porter
BRIDGE ENGINEER

Department of Highways
BRIDGE UNIT

L.R. 04017-4 BEAVER COUNTY

RECONSTRUCTION OF
ELLWOOD - KOPPEL BRIDGE
OVER BEAVER RIVER

BOTTOM LATERAL REPLACEMENT
SPANS 6, 7, 8, 9 & 10

SCALE: 3/4" = 1'-0
DATE: JAN., 1956
SHEET 9 OF 12

DWG. NO. R-428

PRD NO. 124

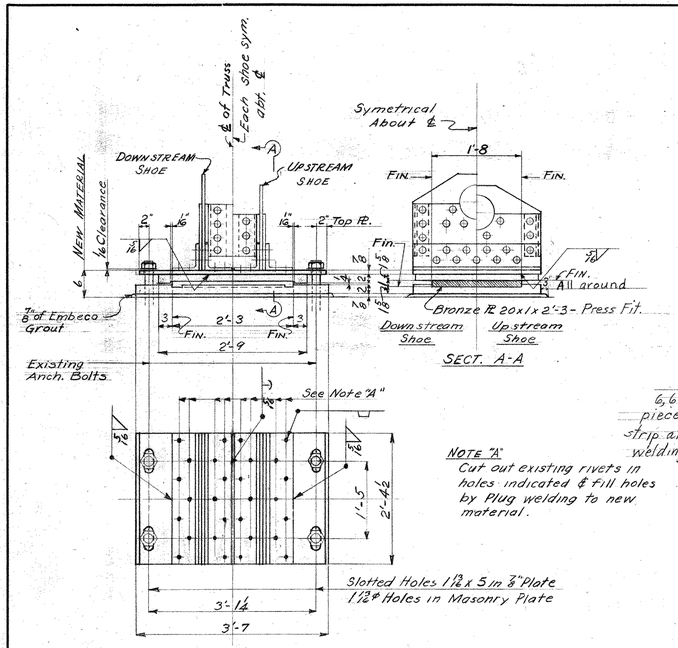

NOTE "A"
Cut out existing rivets in holes indicated & fill holes by Plug welding to new material.

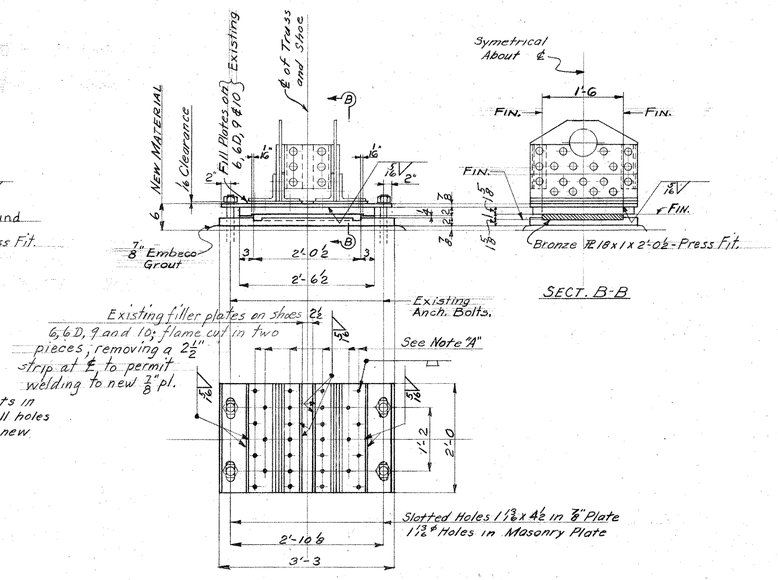

REPAIR OF EXPANSION SHOES FOR SPAN NO. 5 ON PIER NO. 4

NEW MATERIAL FOR ONE SHOE

1 - Sole Pl 28 1/2 x 3/8 x 3'-5 1/2
1 - Brng Pl 27 1/2 x 2 x 2'-9 (FIN. as shown)
1 - Bronze Pl 20 x 1 x 2'-3 - Press Fit.
1 - Masonry Pl 28 1/2 x 2 x 3'-7 (FIN. as noted)

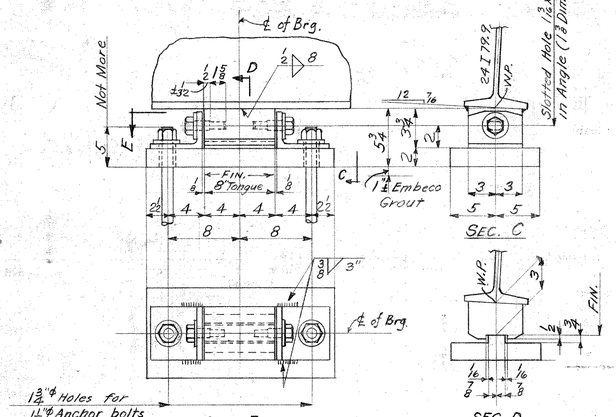

NEW MATERIAL FOR ONE SHOE

1 - Sole Pl 6 x 3 (on ℄) x 0'-8
1 - Mas. Pl 10 x 2 3/8 x 1'-9
2 - Shouldered turned Tap bolts 3" Lg.
2 - Washers 2 1/4" x 3/8 thk., 1 5/8" ϕ hole.
2 - Ls 6 x 3 1/2 x 2 x 0'-6
2 - Swedged Anchor Bolts 1 1/4" ϕ x 2'-3"
2 - Washers 3" x 3/8 - 1 7/8" ϕ Hole

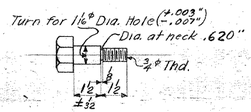

ENLARGED DETAIL OF SHOULDERED TURNED TAP BOLT

NEW FIXED SHOE FOR ABUTMENT "O" (2 Req'd.)

SHOES AT ABUTMENT 12 TO BE SIMILAR.

REPAIR OF EXPANSION SHOES FOR SPANS NO. 6 TO NO. 10 INCL. ON PIERS NO. 6 TO NO. 10 INCL.

NEW MATERIAL FOR ONE SHOE

1 - Sole Pl 24 x 3/8 x 3'-2 1/2
1 - Brng. Pl 23 x 2 x 2'-6 1/2
1 - Bronze Pl 18 x 1 x 2'-0 1/2 - Press Fit.
1 - Masonry Pl 24 x 2 x 3'-3 FIN. as noted.

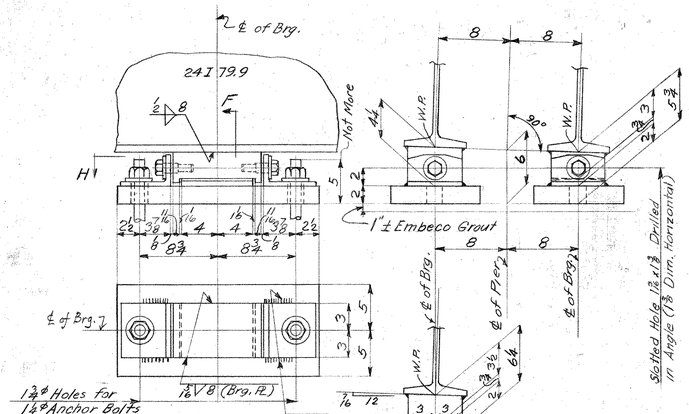

NEW MATERIAL FOR ONE SHOE

1 - Sole Pl 6 x (4" or 3 1/2") on ℄ x 0'-9 1/2"
(F2 E & F 2 Sides)
1 - Mas. Pl 10 x 2 x 1'-10 1/2
1 - Brg. Pl 6 x 3/4 x 0'-8
2 - Ls 6 x 3 1/2 x 2 x 0'-6
2 - Shouldered turned Tap bolts 3" Lg
(See Abut. Shoe Detail)
2 - Washers 2 1/4" x 3/8 thk., 1 5/8" ϕ hole.
2 - Swedged Anchor Bolts 1 1/4" x 2'-3
2 - Washers 3" x 3/8 Thk. - 1 7/8" ϕ hole

NEW EXP. SHOES AT PIER NO. 1
(Two pair req'd.)

SHOE REACTIONS (IN KIPS)		
LOCATION	JACKING REACT. (See Note Below)	MAX. REACT. D + L.L. + I.
EXP. SHOES - SPAN 5 - PIER 4	89	341
EXP. SHOES - SPANS 6 TO 9 INCL. - PIERS 6, 7, 8 & 9	47	213
EXP. SHOES - SPAN 10 - PIER 10	57	265
EXP. SHOES - SPANS 1 & 2 - PIER 1	—	131
FIXED SHOES - SPAN 12 - ABUTMENT 12	—	131
FIXED SHOES - SPAN 1 - ABUTMENT 0	—	131

NOTE:
"Jacking Reactions" are based on the assumption that order of Erection Procedure for Spans 5 to 10 incl., will be as follows.
1. Removal of existing wood and asphalt flooring, walkway, and railings, but leaving the existing floor system in place.
2. Replacement and repair of bottom lateral system.
3. Replacement and repair of Exp. shoes.
4. Replacement and repair of existing floor system.

It should be noted that the top lateral system would be ineffective without Int. floor beams to act as struts. There is a separate strut underneath each End floor beam and it does not need to be replaced.

Straighten existing Anchor Bolts.

NOTES:
Lower parts of Exp. Shoes for Spans 5 to 10 incl. are to be replaced with new material as shown on this sheet.
Shoes for Abutments and Piers 1, 2, 10 and 11 are to be replaced with new ones as shown on this sheet and Sheet 4.

MATERIAL:
All new material listed on this Sheet shall be Structural Carbon Steel except Bronze Bearing Plates when noted.
Bronze shall conform to A.S.T.M. Designation B100-54, Alloy 1.
The Bronze Plates shall be one of the following:
Rolled Bronze Alloy, with "Lubrite Trepanned Inserts", as manufactured by Merriman Bros. Inc., Boston, Mass.
or
"Metaline" Plates as mfd. by the Spadone-Alpha Corporation, South Norwalk, Conn.
or
"Graphite Bronze Plates" as mfd. by the Whitely Bearing Corporation, Chicago, Illinois.

FOR SHOES AT ABUTMENTS
Pre-set and grout anchor bolts to Templet.
Start puts on anchor bolts while floor beam is being lowered into place, or blocked-up on abutment.
Anchor bolts set with Embeco Grout in 2" ϕ holes, drilled in abutments.

APPROVED May 14 1956.
BRIDGE ENGINEER

Commonwealth of Pennsylvania
Department of Highways
BRIDGE UNIT
L.R. 04017-4 BEAVER COUNTY
RECONSTRUCTION OF
ELLWOOD-KOPPEL BRIDGE
OVER BEAVER RIVER
SHOE REPAIRS & REPLACEMENT

SCALE: 3/4" = 1'-0, Unless Noted
DATE: JAN., 1956
SHEET 10 OF 12
DWG. NO. R-428

ARK A-TEX BLUE PENCIL CLOTH. © K. ELLIOTT CO., PGH., PA.

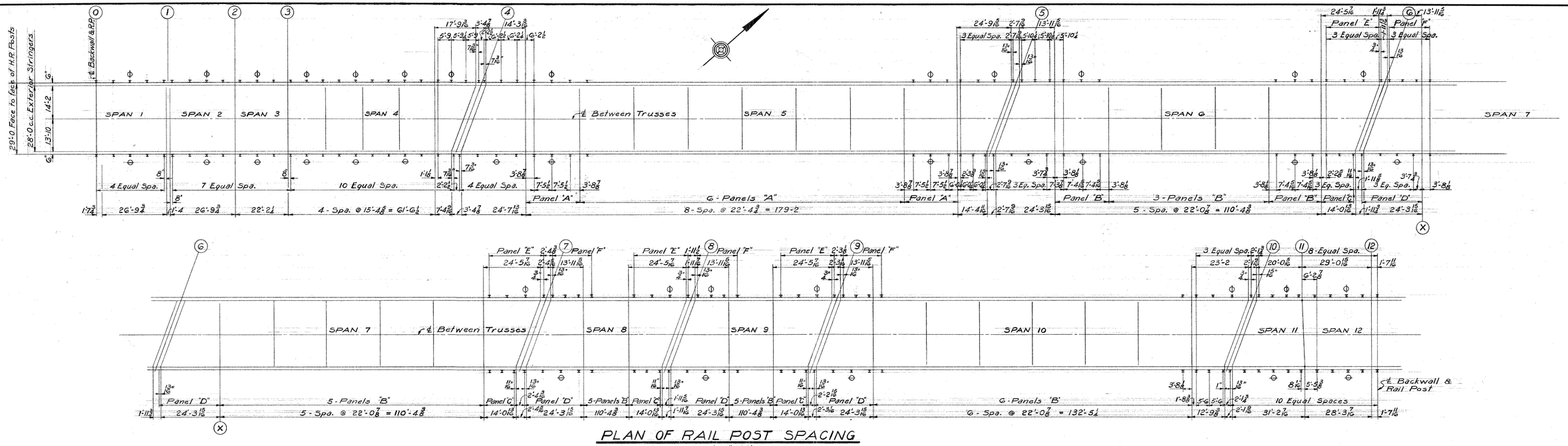

PLAN OF RAIL POST SPACING

Scale 1" = 20'-0

Symbols ⊖ and ⦶ indicate location of expansion joints in Hand Railing. See sheet 3 for details.

NOTES

All dimensions are measured along grade at the bottom of the exterior stringers. (See sheet 2)

Rail Posts are to be set vertical.

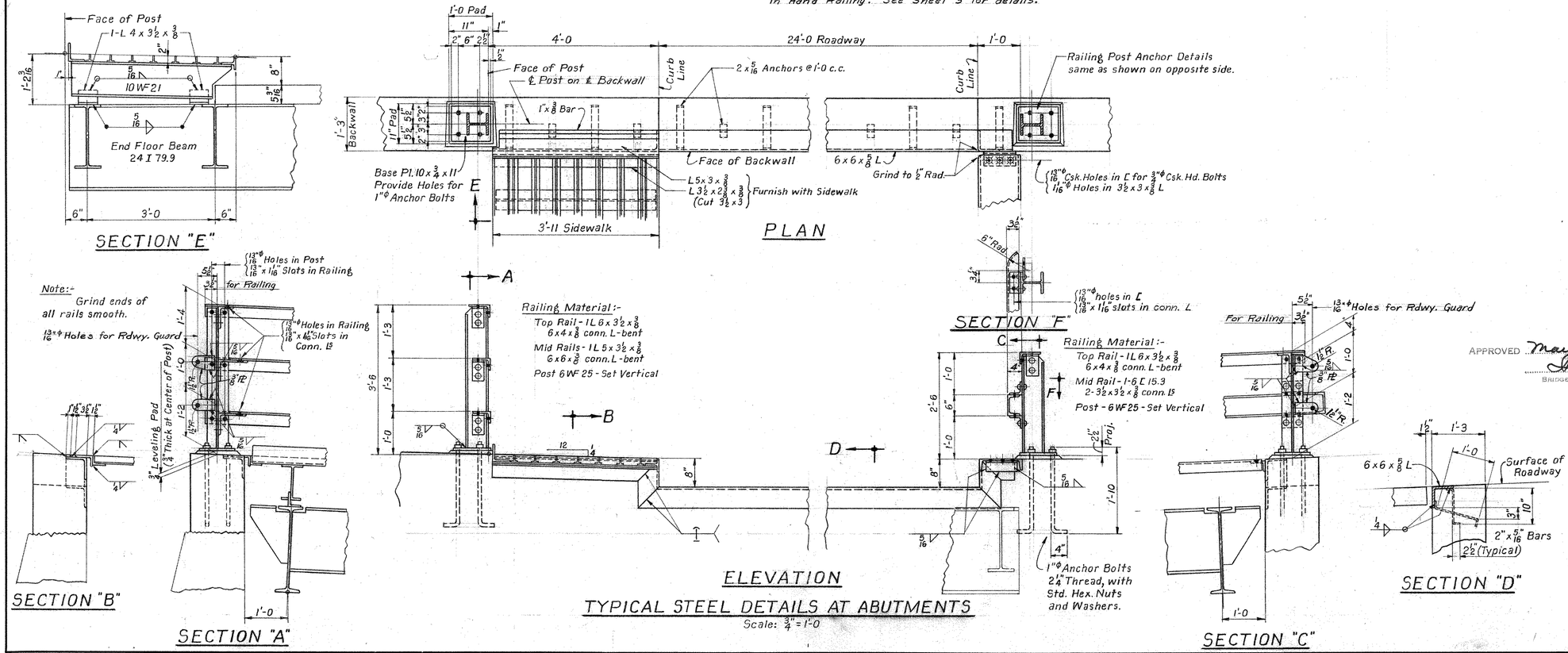

SECTION "E"

PLAN

SECTION "B"

SECTION "A"

ELEVATION

SECTION "F"

TYPICAL STEEL DETAILS AT ABUTMENTS

Scale: ¾" = 1'-0

SECTION "C"

SECTION "D"

APPROVED May 14, 1956.
J. A. Porter
BRIDGE ENGINEER

Commonwealth of Pennsylvania

Department of Highways

BRIDGE UNIT

L.R. 04017-4 BEAVER COUNTY

RECONSTRUCTION OF

ELLWOOD - KOPPEL BRIDGE

OVER BEAVER RIVER

RAILING POST PLAN

AND STEEL DETAILS AT ABUTMENT

SCALE: 1" = 20' & ¾" = 1'-0"

DATE: JAN., 1956

SHEET 11 OF 12

DWG. NO. R-428

NO. 124

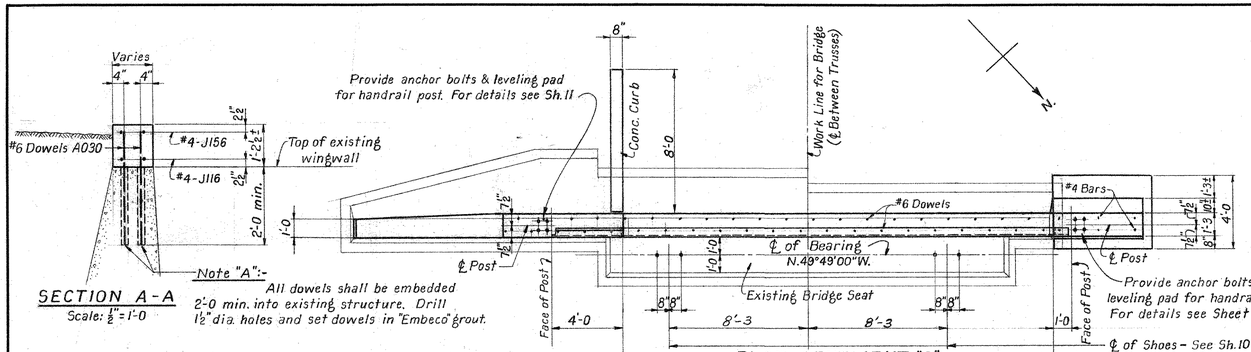

SCHEDULE OF REINFORCEMENT

MARK	NO. REQD	SIZE	TYPE	STOCK LENGTH	a	b	c	d	e	f	g
ABUTMENT "0"											
A036	3	#4	A	3'-6							
A046	4	#4	A	4'-6							
A050	2	#4	A	5'-0							
A063	3	#4	A	6'-3							
A186	4	#4	A	18'-6							
A200	4	#4	A	20'-0							
L069	4	#4	L	6'-9	4'-9	1'-6	3"	12"			
J116	2	#4	J	11'-6	9'-0	2'-6	8"	12"			
J156	2	#4	J	15'-6	9'-5	6'-1	8"	12"			
A039	9	#6	A	3'-9							
A030	41	#6	A	3'-0							
A030	32	#5	A	3'-0	3'-0						
J069	2	#6	J	6'-9	4'-6	2'-3	8"	12"			
ABUTMENT "12"											
A046	2	#4	A	4'-6							
A056	2	"	"	5'-6							
D033	4	"	D	3'-3	1'-7½	1'-7½					
J020	1	"	J	2'-0	0'-4	1'-8	12"	12"			
J029	1	"	J	2'-9	0'-7	2'-2	12"	12"			
J030	1	"	J	3'-0	1'-3	1'-9	12"	12"			
J039	1	"	J	3'-9	1'-6	2'-3	12"	12"			
J046	1	"	J	4'-6	2'-9	1'-9	12"	12"			
J056	1	"	J	5'-6	3'-3	2'-3	12"	12"			
J060	1	"	J	6'-0	4'-3	1'-9	12"	12"			
J070	1	"	J	7'-0	4'-10	2'-2	12"	12"			
A310	6	"	A	3'-0							
A036	1	#6	A	3'-6							
A040	6	"	A	4'-0							
A046	1	"	"	4'-6							
A049	30	"	"	4'-9							
A050	4	"	"	5'-0							
A056	7	"	"	5'-6							
A059	1	"	"	5'-9							
A060	1	"	"	6'-0							
A066	4	"	"	6'-6							
A069	2	#4	"	6'-9							
A076	2	#4	"	7'-6							
D053	2	#6	D	5'-3	4'-6	9"					
E039	5	#4	E	3'-9	7"	1'-7	1'-7				
U053	2	#4	U	5'-3	5'-0	6"					
U059	2	#4	U	5'-9	5'-6	7"					

For bar types and bending diagrams, See Sheet #1 Pa. State Hwy. Dwg. No. S-1894.

NOTE

New Concrete shall be Class A.

New Concrete shall not be poured until the superstructure has been completely erected, and Abutment Expansion Dam properly aligned.

Two-coat Painted Waterproofing shall be applied to the rear surface of new concrete with a 6" lap onto the existing concrete.

APPROVED May 14, 1956
L. A. Cortelyou
BRIDGE ENGINEER

Commonwealth of Pennsylvania

Department of Highways
BRIDGE UNIT

L.R. 04017-4 BEAVER COUNTY

RECONSTRUCTION OF
ELLWOOD - KOPPEL BRIDGE
OVER BEAVER RIVER

ALTERATION OF ABUTMENTS "0" & 12

SCALE: ¼" = 1'-0, Unless Noted
DATE: JAN., 1956
SHEET 12 OF 12

DWG. NO. R-428

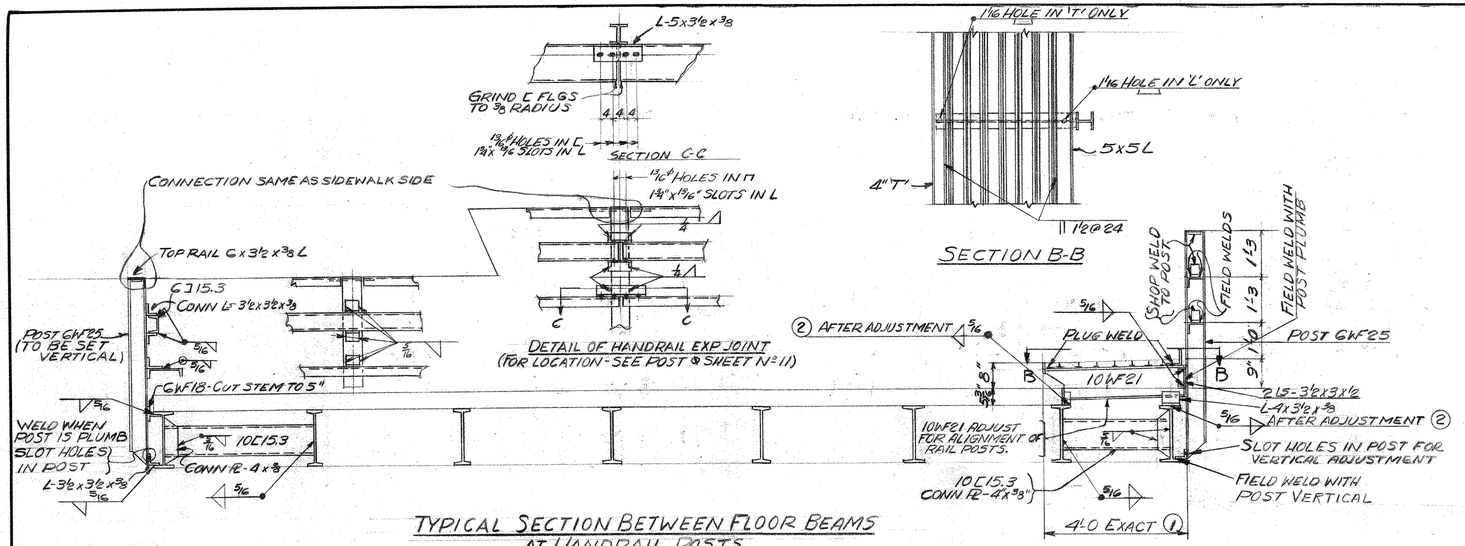

TYPICAL SECTION BETWEEN FLOOR BEAMS AT HANDRAIL POSTS

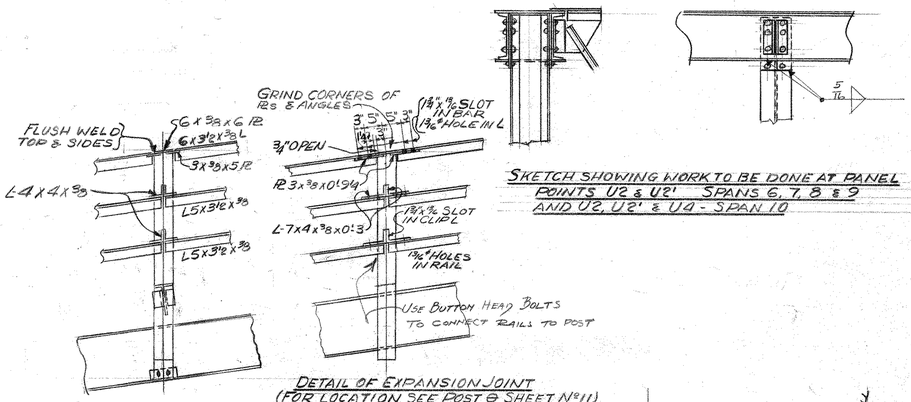

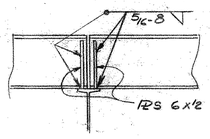

TYPICAL STRINGER DETAIL

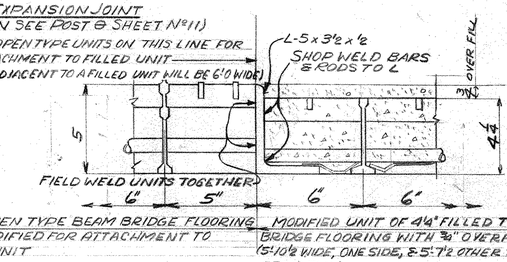

5" OPEN TYPE BEAM BRIDGE FLOORING UNIT MODIFIED FOR ATTACHMENT TO FILLED UNIT

MODIFIED UNIT OF 4¼" FILLED TYPE BM BRIDGE FLOORING WITH ⅜" OVERFILL (5'-10½" WIDE, ONE SIDE, & 5'-7½ OTHER SIDE OF OPEN FLR.)

SECTION SHOWING PROPOSED CONNECTION OF OPEN UNIT TO FILLED UNIT OF FLOORING

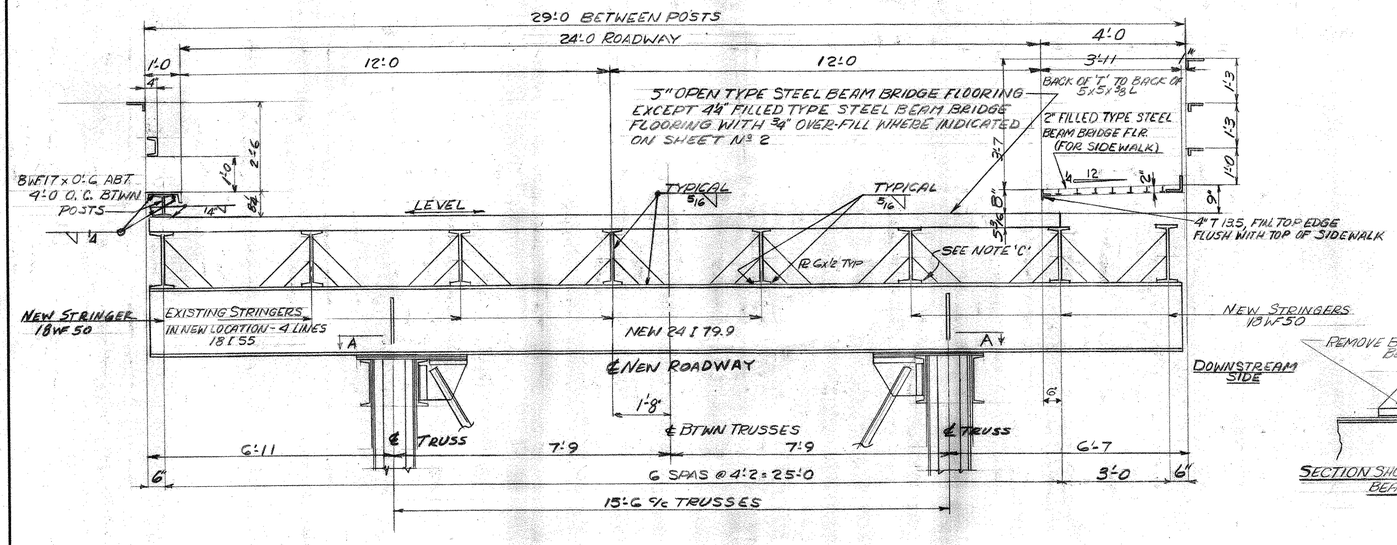

TYPICAL SECTION AT INT FLOOR BEAM LOOKING EAST
(SEE SHEETS 2, 5 & 6 FOR ARRANGEMENT, ETC.)

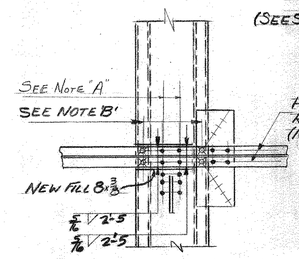

SECTION AT UN-SWAY BRACED PANELS

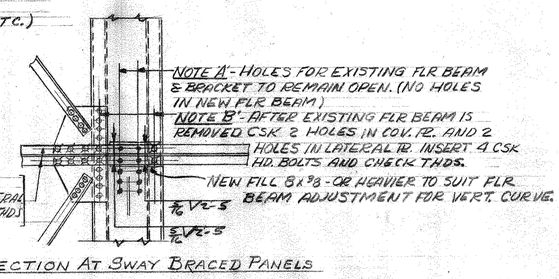

SECTION AT SWAY BRACED PANELS

SECTION A-A SHOWING NEW FL BEAMS IN PLACE

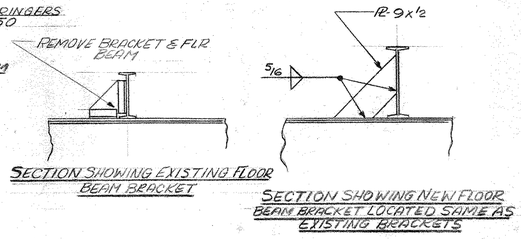

NOTES: NOTE 'C'-

PROVIDE AND WELD IN FIELD ADJUSTMENT SHIMS BETWEEN BOTTOM OF STRINGERS AND FLR BEAMS TO BRING TOPS OF STRINGERS AND STEEL FLOORING TO THE REQUIRED VERTICAL ALIGNMENT OF ROADWAY (¼" NORMAL SHIMS EXCEPT ON VERTICAL CURVES AND AS OTHERWISE NOTED)

FLOOR BEAMS AND SIDEWALK JOISTS

SHALL BE SET NORMAL TO GRADE AND NORMAL TO TOP CHORDS OF TRUSS.

STRINGERS

SHALL BE PARALLEL TO GRADE, EXCEPT THAT ON THE VERTICAL CURVES STRINGERS SHALL BE CHORDS OF THE CURVE.

NEW STRINGERS SHALL BE FABRICATED WITH MILL CAMBER TURNED UP.

BOLTS

HIGH TENSILE BOLTS MAY BE USED IN LIEU OF RIVETS IN ACCORDANCE WITH A.A.S.H.O. SPECS.

RAILING POSTS

SHALL BE VERTICAL, SEE SHEET Nº 11 FOR SPACING.

HIGH TENSILE BOLT SHALL BE TIGHTENED WITH A TORQUE OR IMPACT WRENCH.

FLAME CUTTING - STEEL MAY BE FLAME CUT PROVIDED A SMOOTH SURFACE IS SECURED BY A MECHANICAL GUIDE - FLAME CUTTING BY HAND WILL BE DONE ONLY WHERE PERMITTED BY THE ENGINEER. SEE 3.2.23 FORM 409.

APPROVED Oct. 17, 1956
P. W. Armer
BRIDGE ENGINEER

Jan 11th 6/12

Commonwealth of Pennsylvania

Department of Highways
BRIDGE UNIT

L.R. 04017-4 BEAVER COUNTY
RECONSTRUCTION OF
ELLWOOD - KOPPEL BRIDGE
OVER BEAVER RIVER
ALTERNATE WELDED CONSTRUCTION
CROSS SECTION & FLOOR SYSTEM DETAILS FOR TRUSS SPANS

SCALE ½" = 1'-0" UNLESS NOTED
DATE JAN 1956
SHEET 1 OF 4
DWG. NO. R-428A

DIAGRAM OF BOTTOM LATERALS
BOTTOM CHORD REINFORCING

DIAGRAM OF TOP CHORD REINFORCING

BOTTOM LATERALS - SPAN 4

ELEVATION OF TRUSSES SPAN 4

DETAIL "D" SCALE 1½" = 1'-0
USE THIS DETAIL TO REINFORCE ALL FOUR JOINTS L1, L1' & L1"
DO NOT WELD THE ℄ PLS TO TRUSS GUSSETS

SEC A-A

NOTE A
DRILL FIELD HOLES IN PLATES TO MATCH HOLES IN TRUSS MEMBERS

WORK TO BE DONE

1. REPLACE BOTTOM LATERAL SYSTEM AS SHOWN AND NOTED. REMOVE THE LATERALS BY CUTTING OUT THE RIVETS THAT CONNECT LATERAL PLATES TO BOTTOM CHORDS. REMOVE BENT PLATES AT L1, L1' & L1" BY CUTTING OUT RIVETS THAT CONNECT THEM TO END BRACING AND TRUSS MEMBERS. SEE SHEET NO 13 FOR PROCEDURE FOR OBTAINING ⅜ DRAW IN LATERAL ANGLES
2. REINFORCE BOTH TRUSSES AS SHOWN AND NOTED ON "ELEVATION". THIS REINFORCEMENT MUST BE DONE WHILE THE OLD TIMBER DECK, RAILING, AND STRINGERS ARE REMOVED, BUT WITH THE FLOOR BEAMS IN PLACE. MEMBERS TO BE REINFORCED ARE U2U4, U2'U4', L3L3', U0L1, U2L3, AND U2'L3'-BOTH TRUSSES; ALSO U0'L1' AND U0"L1".

USE HIGH TENSILE BOLTS IN PLACE OF RIVETS BOLTS ¾ DIA

ALL MATERIAL SHALL BE CUT TO SIZE OR LENGTH BY SHEARING OR GAS CUTTING, USING A MECHANICALLY GUIDED TORCH

Commonwealth of Pennsylvania

Department of Highways
BRIDGE UNIT

L.R. 04017-4 BEAVER COUNTY
RECONSTRUCTION OF
ELLWOOD - KOPPEL BRIDGE
OVER BEAVER RIVER
ALTERNATE WELDED CONSTRUCTION
BOTTOM LATERAL REPLACEMENT
AND TRUSS REINFORCEMENT SPAN 4

APPROVED Oct. 17, 1956
R. W. Arnes
BRIDGE ENGINEER

SCALE 3/4" = 1'-0" UNLESS NOTED
DATE JAN. 1956
SHEET 2 OF 4

DWG NO. R-428A

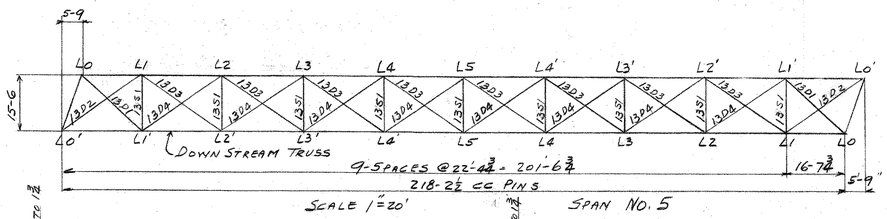

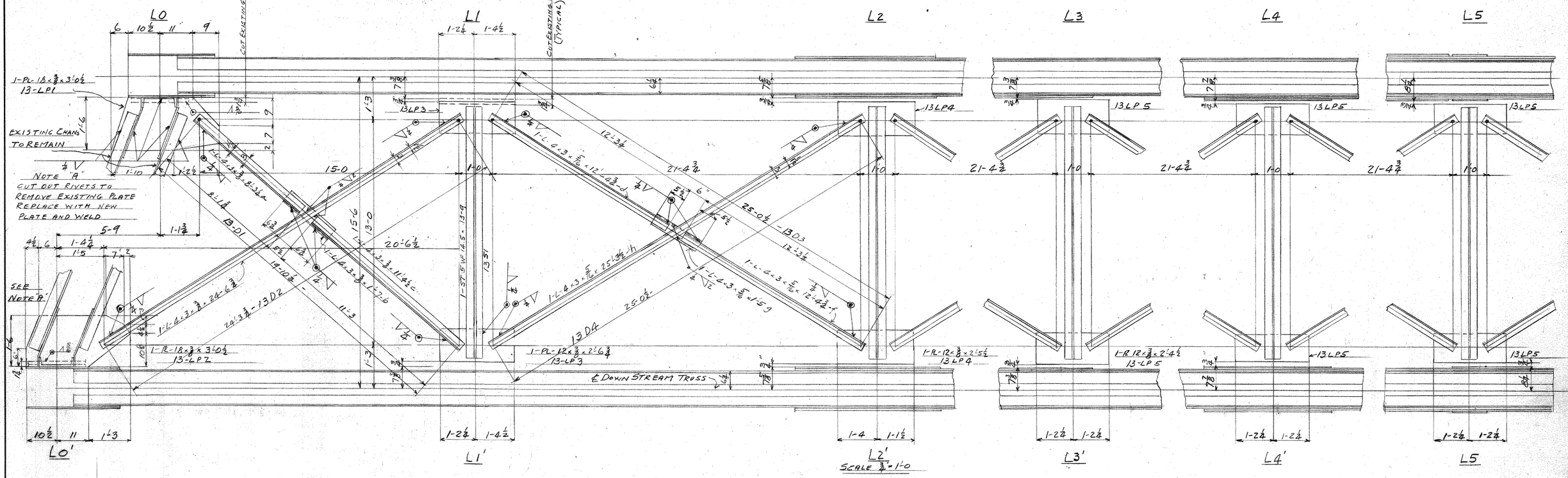

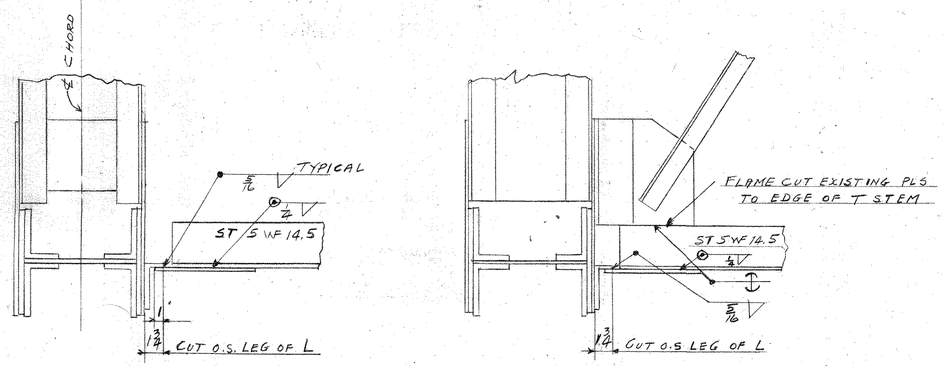

TYPICAL SECTIONS SHOWING PROPOSED CONNECTIONS OF BOTTOM LATERAL PLATES AND STRUTS
SCALE 1½"=1'-0"

GENERAL PROCEEDURE

CUT OUT STANDING LEG OF CONNECTION ANGLES PARALLEL TO AND 1¾" FROM BACK OF OTHER LEG.
REMOVE OLD LATERAL BRACING.
REMOVE OLD LATERAL PLATES AT END STRUTS BY CUTTING OUT RIVETS AS INDICATED IN NOTE "A"
CONNECT NEW LATERAL PLATES TO END STRUTS AND WELD

CENTER NEW STRUTS ON PANEL POINTS AS ACCURATELY AS POSSIBLE AND WELD NEW PLATES TO ANGLES AS INDICATED
ALL PLATES ARE ⅜" THICK.

PROCEEDURE FOR OBTAINING ⅞ DRAW IN LATERAL ANGLES.
DRILL 1-$\frac{13}{16}$ϕ HOLE IN LATERAL PLATE AND 1-$\frac{13}{16}$ϕ HOLE IN ONE END OF LATERAL ANGLE. INSERT A ⅞ϕ BOLT, PULL ANGLE AS FAR AS POSSIBLE TO OPPOSITE SIDE AND WELD AS INDICATED.
REMOVE BOLT AND DRIVE A $\frac{13}{16}$ϕ DRIFT PIN IN HOLE.
WELD THIS END AS INDICATED
ALL MATERIAL SHALL BE CUT TO SIZE OR LENGTH BY SHEARING OR GAS CUTTING, USING A MECHANICALLY GUIDED TORCH

APPROVED Oct. 17, 1956
P. W. Arnon
BRIDGE ENGINEER

Commonwealth of Pennsylvania
Department of Highways
BRIDGE UNIT

L.R. 04017-4 BEAVER COUNTY
RECONSTRUCTION OF
ELLWOOD - KOPPEL BRIDGE
OVER BEAVER RIVER
ALTERNATE WELDED CONSTRUCTION
BOTTOM LATERAL REPLACEMENT
SPAN 5

SCALE AS NOTED
DATE JAN 1956
SHEET 3 OF 4
DWG NO. R-428A

a b c d e f g h

ARK-A-TEX BLUE PENCIL CLOTH. B. K. ELLIOTT CO., PGH., PA.

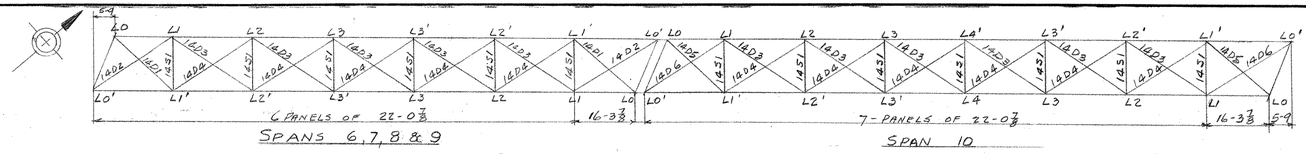

SPANS 6, 7, 8 & 9

SPAN 10

DIAGRAM OF BOTTOM LATERALS

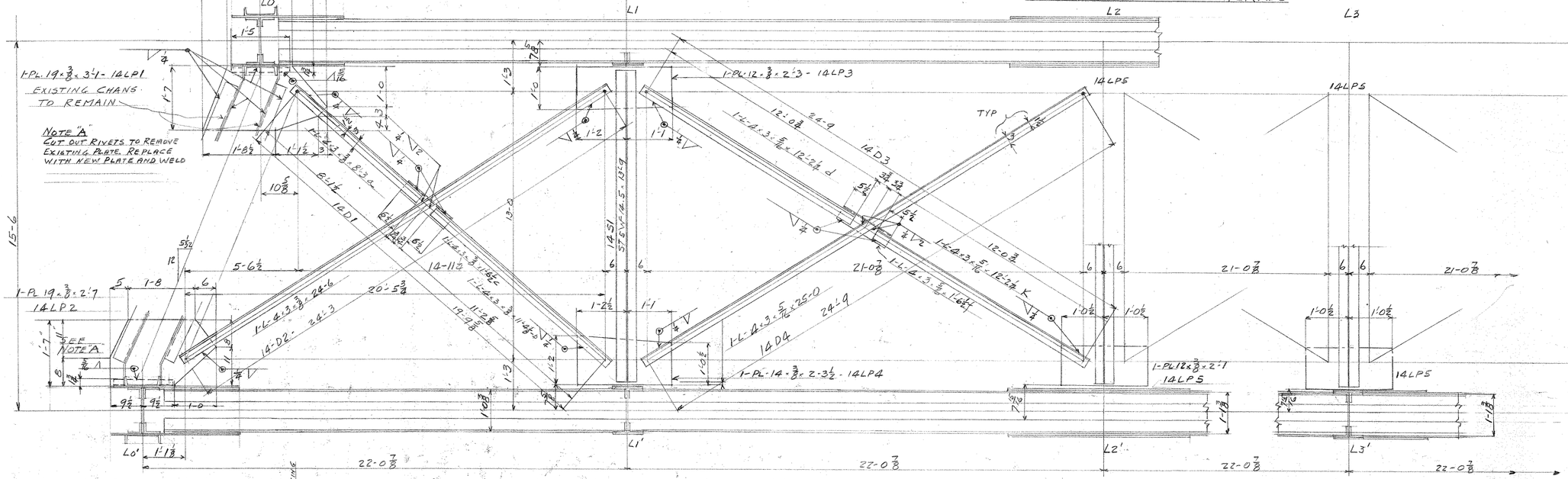

BOTTOM LATERALS SPANS 6, 7, 8 & 9

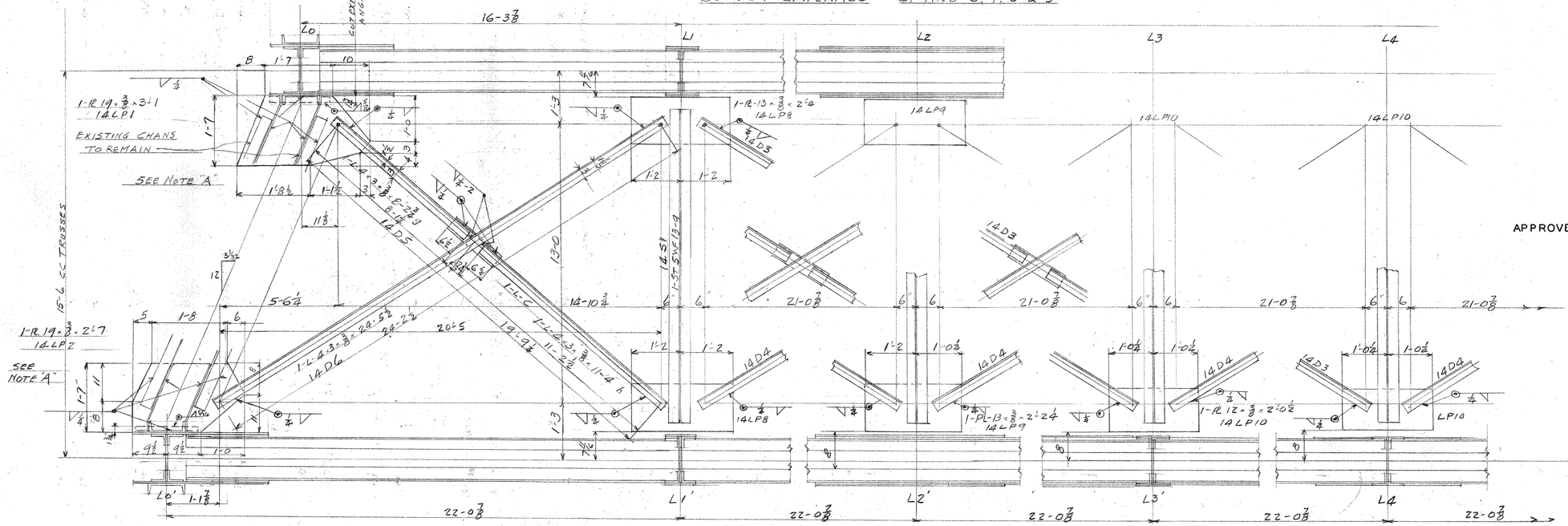

BOTTOM LATERALS - SPAN 10

NOTES

SEE SHEET 13-S42P FOR GENERAL PROCEDURE AND TYPICAL SECTIONS SHOWING WELDING OF LATERAL PLATES TO LOWER CHORDS, AND STRUTS TO SWAY BRACING.

APPROVED Oct. 17, 1956.

R. W. Arnes
BRIDGE ENGINEER

Commonwealth of Pennsylvania

Department of Highways
BRIDGE UNIT

L.R. 04017-4 BEAVER COUNTY

RECONSTRUCTION OF
ELLWOOD - KOPPEL BRIDGE
OVER BEAVER RIVER
ALTERNATE WELDED CONSTRUCTION
BOTTOM LATERAL REPLACEMENT
SPANS 6, 7, 8, 9 & 10

SCALE 3/4" = 1'-0"
DATE JAN. 1956
SHEET 4 OF 4

DWG NO. R-428 A

7530-2350-0200

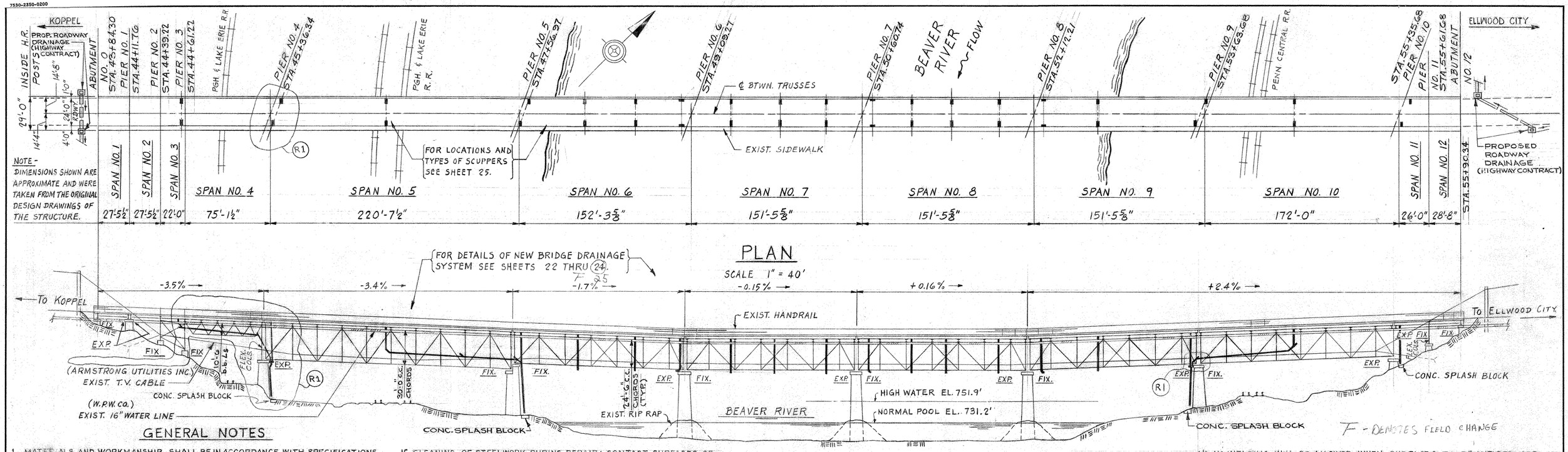

PLAN

SCALE 1" = 40'

F - DENOTES FIELD CHANGE

GENERAL NOTES

1. MATERIALS AND WORKMANSHIP SHALL BE IN ACCORDANCE WITH SPECIFICATIONS FORMS 408/73, 409/73, AND THE SPECIAL PROVISIONS.
2. STEEL: STRUCTURAL STEEL SHALL CONFORM TO ASTM-A36 EXCEPT WHERE NOTED OTHERWISE.
3. DESIGN SPECIFICATIONS: DESIGN DIVISION OF 1973 AASHTO "STANDARD SPECIFICATIONS FOR HIGHWAY BRIDGES" (INCLUDING 1974 INTERIM SPECIFICATIONS) AND AS SUPPLEMENTED BY THE DESIGN MANUAL, PART 4, "STRUCTURES" (INCLUDING REVISION PRIOR TO 5-73)
4. LIVE LOADS: HS-20-44 LOADING.
5. 2" CONCRETE COVER SHALL BE PROVIDED ON REINFORCEMENT BARS EXCEPT WHERE NOTED OTHERWISE.
6. CLASS HES CEMENT CONCRETE SHALL BE USED IN THE DECK.
   CLASS A, SPECIAL, CEMENT CONCRETE SHALL BE USED IN THE PIERS AND ABUTMENTS. SEE SHEET 2 OF 33 FOR NOTES PERTAINING TO CONCRETE REPAIRS AT PIERS AND ABUTMENTS.
   CLASS B CEMENT CONCRETE SHALL BE USED IN THE SPLASH BLOCKS.
7. CONCRETE ADMIXTURES SHALL BE USED IN ACCORDANCE WITH FORM 408/73, SECTION 711.3 (b) IS DELETED.
8. EXPOSED CONCRETE EDGES SHALL BE CHAMFERED 1"x 1" EXCEPT AS NOTED.
9. EPOXY RESIN ADHESIVE SHALL BE USED AS A BONDING AGENT IN ADHERING NEW CONCRETE TO OLD IN AREAS TO BE REPAIRED. SEE SPECIAL PROVISIONS FOR SPECIFICATIONS FOR THIS MATERIAL.
10. THE ENGINEER MAY DELETE ANY ITEM, IN WHOLE OR IN PART, OR ADD TO ANY ITEM. COMPENSATION WILL BE BASED ON UNIT PRICE BID AND ACTUAL QUANITY OF THE ITEM USED.
11. THE CONTRACTOR SHALL VERIFY ALL NECESSARY DIMENSIONS AND ELEVATIONS OF THE EXISTING STRUCTURE REQUIRED TO PERFORM HIS WORK PRIOR TO CONSTRUCTION.
12. THE ORIGINAL SHOP DRAWINGS ARE NO LONGER IN EXISTANCE. SHOP DRAWINGS OF THE 1956 AND 1974 REPAIRS TO THE SUBJECT STRUCTURE ARE AVAILABLE AT THE OFFICE OF DISTRICT 11-0 UPON REQUEST.
13. NEW FASTENERS SHALL BE A.S.T.M. A325 HIGH STRENGTH BOLTS (FRICTION-TYPE CONNECTIONS) OR AS NOTED ON THE DRAWINGS. ALL HIGH STRENGTH BOLTS SHALL BE INSTALLED IN ACCORDANCE WITH FORM 409/73, SECTION 10.53.18(d).
14. THE DEPARTMENT DOES NOT GUARANTEE THE LOCATION QUANTITY OR DESIGNATION AS SHOWN AND/OR REFERRED TO ON THE PLANS, NEITHER DOES THE DEPARTMENT GUARANTEE THAT ALL DEFECTS ARE SHOWN. THE QUANTITIES SHOWN ARE FOR THE CONTRACTORS GUIDANCE ONLY AND SHALL NOT BE HELD AS BINDING IN ANY WAY. CONTRACTOR SHALL CONFIRM ALL LOCATION, QUANTITY AND DESIGNATION PRIOR TO FABRICATION.
15. CLEANING OF STEELWORK DURING REPAIR: CONTACT SURFACES OF EXISTING STEELWORK WHICH ARE TO BE ENCLOSED OR COVERED BY REPAIR OR REINFORCING MATERAL SHALL BE CLEANED OF PAINT, DIRT, RUST AND OTHER FOREIGN MATTER BY METHOD 1 IN ACCORDANCE WITH FORM 409/73, SECTION 1073.01(b). THIS WORK WILL BE CONSIDERED INCIDENTAL TO THE ITEM OF FABRICATED STRUCTURAL STEEL.
16. PORTIONS OF NEW AND EXISTING SURFACES TO RECEIVE WELDS SHALL BE CLEANED THROUGHLY OF ALL FOREIGN MATTER, INCLUDING PAINT FILM, FOR A DISTANCE OF 2" FROM EACH SIDE OF THE OUTSIDE LINES OF WELD.
17. HOLES: FIELD HOLES MAY BE DRILLED, SUB-PUNCHED AND REAMED IN THE FIELD, OR UNDERSIZED HOLES MAY BE BURNED IN THE FIELD AND REAMED TO FULL SIZE WITH ALL PARTS ASSEMBLED AND FIRMLY BOLTED IN PLACE.
18. SYMBOLS DESIGNATED THUSLY [1] ARE REFERENCE NUMBERS FOR VARIOUS ITEMS OF WORK, SEE DRAWING NO. 2 FOR DESCRIPTION AND ESTIMATED QUANTITIES OF THE VARIOUS ITEMS.
19. SHOP AND FIELD CONTACT SURFACES SHALL NOT BE PAINTED.
20. ALL PAINTING SHALL BE IN ACCORDANCE WITH SECTIONS 1060, 1070 AND BULLETIN NO. 26, DATED OCTOBER, 1975. EXISTING STRUCTURAL STEEL, AFFECTED BY REPAIR, SHALL BE PRIMED WITH COLOR NO. 1 BEFORE VISIBLE RUSTING OCCURS, THEN AN INTERMEDIATE COAT OF COLOR NO. 8 (SANDSTONE) AND FINAL FIELD COAT, TINTED TO MATCH EXISTING COLOR OF STRUCTURE.
21. FOR NOTES PERTAINING TO REPAIRS AND REPLACEMENT OF BEARINGS SEE SHEET 7 OF 33. FOR NOTES PERTAINING TO DRAINAGE SEE SHEET 22 OF 33.
22. WELDING OF EXISTING WROUGHT IRON AND STRUCTURAL STEEL:
   (a.) OVERHEAD WELDS - USE SHIELDED METAL ARC PROCESS AND E7016 ELECTRODES.
   (b.) OTHER WELDS - USE SUBMERGED ARC OR SHIELDED METAL ARC PROCESS WITH E7016 ELECTRODES.
   (c.) TACK WELDS SHALL BE MADE WITH SAME TYPE ELECTRODE AS THE FINAL WELD.

(CONTINUED AT RIGHT)

ELEVATION (DOWNSTREAM TRUSSES)

SCALE 1" = 40'

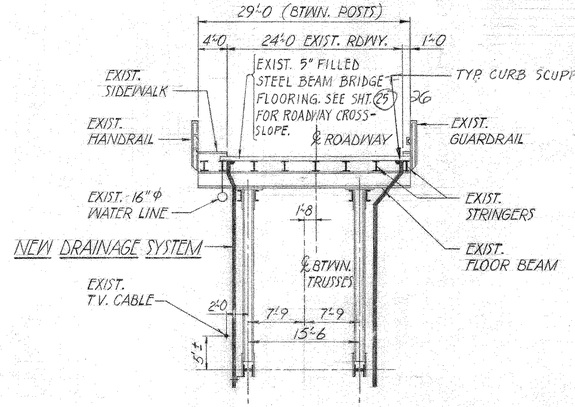

TYPICAL CROSS SECTION
(LOOKING SOUTH)

Prepared By:
SALVUCCI & ASSOCIATES, INC.
301 Fifth Avenue
Pittsburgh, Pa. 15222

COMMONWEALTH OF PENNSYLVANIA JOSEPH SALVUCCI ENGINEER

1/22/76
Date

(d) NO WELDING WILL BE ALLOWED WHEN SURFACES TO BE WELDED ARE WET OR EXPOSED TO RAIN, SNOW OR WIND, OR WHEN WELDERS ARE EXPOSED TO INCLEMENT CONDITIONS THAT WILL HAMPER GOOD WORK.
(e) NO WELDING OR BURNING WILL BE ALLOWED WHEN TEMP. IS BELOW 0°F. WHERE THE TEMP. OF THE METAL IS BETWEEN 0°F AND 30°F THE METAL SHALL BE PREHEATED TO AT LEAST 70°F AND MAINTAINED AT THIS TEMPERATURE DURING WELDING OR BURNING. THE AREA TO BE HEATED SHALL EXTEND 3" BEYOND THE WELD IN ALL DIRECTIONS.
(f) SURFACES TO BE WELDED SHALL BE CLEANED OF ALL FOREIGN MATERIALS AND SHALL BE PAINTED IN ACCORDANCE WITH THE SPECIAL PROVISIONS. CLEANING SHALL BE 2" EA. SIDE OF THE SIDES OF THE WELD.
(g) ANY MOISTURE PRESENT AT POINT OF WELD SHALL BE REMOVED BY HEAT. WIND BREAKS SHALL BE PROVIDED FOR PROTECTION FROM DIRECT WIND.
(h) WHEN WELDING TO EXISTING MATERIAL, DEPOSIT WELD METAL ON EXISTING MATERIAL (a & b ABOVE), ALLOW TO COOL, THEN WELD NEW STEEL TO WELD METAL.
(i) ALL WELDING SHALL CONFORM TO FORM 409/73 AND STANDARD SPECIFICATIONS FOR WELDING HIGHWAY BRIDGES, 1974 A.A.S.H.T.O.

Mark	Description	By	Chk'd.	App'd.	Date
R1	REVISED DRAINAGE AT PIERS 3,4 & 9	R.A.B.	M.P.F.	N.H.U.	8-19-76

REVISIONS

Commonwealth of Pennsylvania
DEPARTMENT OF TRANSPORTATION
BUREAU OF DESIGN

BEAVER COUNTY
L.R. 04017 SEC. 6 STA. 49 + 74

REHABILITATION OF THE KOPPEL BRIDGE

OVER THE
P & L.E. R.R., PENN CENTRAL R.R. & BEAVER RIVER

GENERAL PLAN AND ELEVATION

APPROVED MAR 9 1976
BRIDGE ENGINEER
002053

SHEET 1 OF 33

S-11862

REH 3-30-76

J.D.G. 3-5-76 (PDMW)

K&E 17 0453 9-73 W2711

7530-2350-0200

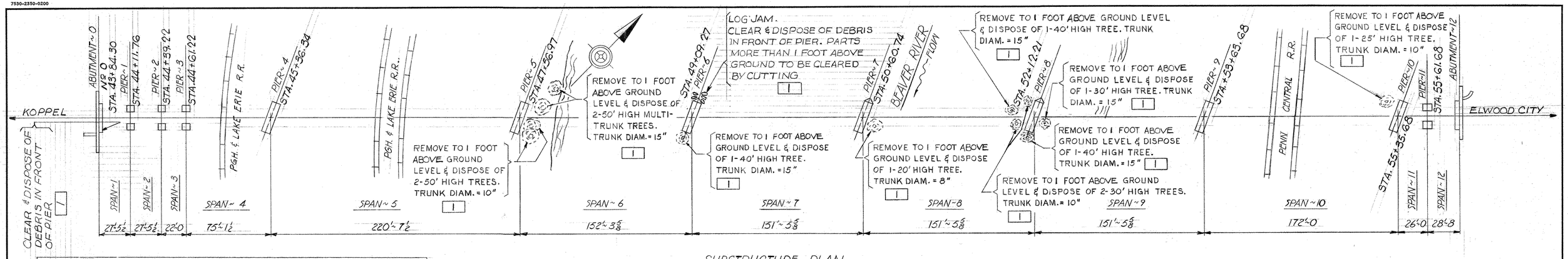

SUBSTRUCTURE PLAN

INDEX OF STRUCTURE DRAWINGS

DWG. No.	DESCRIPTION	DWG. No.	DESCRIPTION
1	GENERAL PLAN & NOTES	17	SUPERSTR. REPAIR DETAILS
2	GENERAL SUBSTR. PLAN & NOTES	18	SUPERSTR. REPAIR DETAILS
3	REPAIRS TO ABUTMENTS	19	TRUSS REINFORCEMENT-SPAN 4
4	REPAIRS TO PIERS 1, 2 & 3	20	TRUSS REINFORCEMENT-SPAN 5
5	REPAIRS TO PIERS 4, 5 & 6	21	TRUSS REINFORCEMENT-SPANS 6-10
6	REPAIRS TO PIERS 7, 8, 9 & 10	22	DRAINAGE
7	REPAIRS TO BEARINGS	23	DRAINAGE
8	REPAIRS TO BEARINGS	24	DRAINAGE
9	SUPERSTR. REPAIR-SPANS 1-5	25	DRAINAGE
10	SUPERSTR. REPAIR-SPANS 1-5	26	DECK & EXP. DAM ALTERATIONS
11	SUPERSTR. REPAIR-SPANS 6,7	27	EXP. DAM DETAILS, PIERS 4 & 10
12	SUPERSTR. REPAIR-SPANS 6,7	28	DECK REPAIRS
13	SUPERSTR. REPAIR-SPANS 8,9	29	STRESS SHEET
14	SUPERSTR. REPAIR-SPANS 8,9	30	STRESS SHEET
15	SUPERSTR. REPAIR-SPANS 10-12	31	STRESS SHEET
16	SUPERSTR. REPAIR-SPANS 10-12	32	CORE BORINGS
		33	CORE BORINGS

NOTES FOR CONCRETE REPAIR AT ABUT.'S AND PIERS.

1. MATERIALS FOR CONCRETE REPAIR ARE AS FOLLOWS:
   CONCRETE – CLASS A SPECIAL CEMENT CONCRETE IN ACCORDANCE WITH FORM 408/73, SECTION 704. THIS CONCRETE SHALL MEET THE REQUIREMENTS OF THE PENN. DEPT. OF TRANS. CLASS A CEMENT CONCRETE WITH THE EXCEPTION THAT THE AGGREGATE TO BE USED SHALL BE 1B.
   FORMS – IN ACCORDANCE WITH FORM 408/73, SECTION 1000.
   EXPANSION BOLTS – LEAD COLLARED EXPANSION BOLTS IN ACCORDANCE WITH FORM 408/73, SECTION 1017.3 (b), AND THE DRAWINGS.
   WIRE FABRIC – GALVANIZED WELDED FABRIC CONSISTING OF No. 12 WIRES SPACED 2" IN EACH DIRECTION.
   TIE WIRE – 14-GAGE ANNEALED WIRE.
   EPOXY PRIMER – MIXED EPOXY RESIN AS DESCRIBED IN THE SPECIAL PROVISIONS.
2. DETERIORATED CONCRETE SHALL BE REPAIRED BY THE TYPICAL REPAIR METHOD SHOWN ON THIS SHEET EACH LOCATION REPAIRED, SHALL BE APPROVED BY THE ENGINEER, REGARDLESS OF THAT SHOWN ON THE DRAWING. COMPENSATION WILL BE BASED ON UNIT PRICES AND QUANTITY OF THE ITEMS ACTUALLY USED. SEE SPECIAL PROVISIONS.

ESTIMATED STRUCTURE QUANTITIES

REF. No.	DESCRIPTION	UNIT	TOTAL
1	CLEARING AND GRUBBING	L.S.	L.S.
R1			
3	FABRICATED STRUCTURAL STEEL	LBS.	27,000
4	DOWNSPOUTING, STA. 49+74	L.S.	L.S. *
5	WELDING **	L.F.	230
6	SPECIAL SCUPPERS, TYPE I	EA.	6
7	REPLACE EXPANSION BEARING	EA.	12
8	JACKING BRIDGE SUPERSTR.	L.S.	L.S.
R1			
10	EXPANSION DAM RECONSTRUCTION, FEL-SPAN EXPANSION JOINT, MODEL T-40	L.F.	51
11	EXPANSION DAM RECONSTRUCTION, ARMORED PREFORMED NEOPRENE COMPRESSION DAM.	L.F.	159
12	H.E.S. CEMENT CONCRETE FILL	S.F.	75
13	H.E.S. CEM. CONC. DECK REPAIR	S.F.	4600
14	SPECIAL SCUPPERS, TYPE II	EA.	32
15	REPLACE RIVETS WITH H.S. BOLTS	EA.	60
16	FABRICATED STRUCTURAL STEEL CONTINGENCY **	LBS.	10,000
17	CLASS B CEMENT CONCRETE	C.Y.	2
18	FLAME CUTTING	L.F.	100
19	H.E.S. CEM. CONC. DECK REPAIR-CONTINGENCY **	S.F.	2300
20	CLASS A CEM. CONC., SPECIAL	C.F.	485
21	CLASS A CEM. CONC. SPECIAL CONTINGENCY **	C.F.	250
22	ANCHOR BOLT REPAIR	EA.	63
R1 23	LATEX MODIFIED MORTAR WEARING SURFACE ¾ - 2¼ INCH, VARIABLE DEPTH	S.Y.	3,240

R1 * APPROXIMATELY (1,800) LIN. FT.
** QUANTITY SHOWN FOR THIS ITEM MAY BE LARGER OR SMALLER DEPENDING UPON FIELD CONDITIONS DURING CONSTRUCTION AND IS NOT GUARANTEED TO BE CORRECT. ANY DIFFERENCE WILL NOT BE CAUSE FOR INCREASING OR DECREASING THE CONTRACT UNIT PRICE.

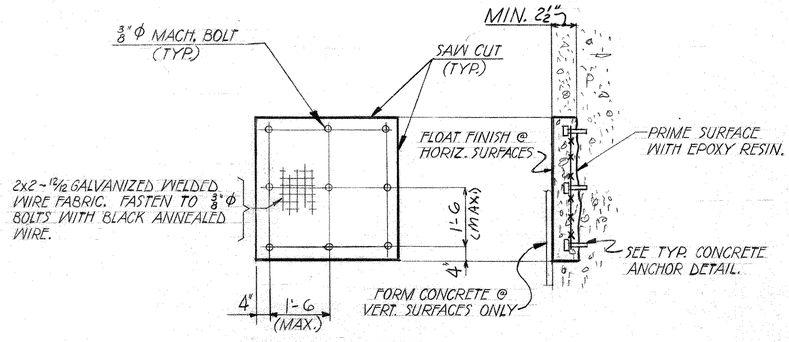

20

CLASS A CEMENT CONCRETE, SPECIAL

(FOR SUBSTRUCTURE REPAIRS)

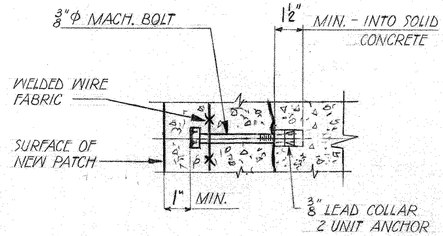

TYPICAL CONCRETE ANCHOR DETAIL

20

Mark	Description	By	Chk'd.	App'd.	Date
	REVISIONS				
R1	DELETED EST. QUANTITIES 2 & 9 & ADDED ITEM 23 & REVISED *	R.A.B.	M.P.F.	N.H.U.	8-17-76

Commonwealth of Pennsylvania
DEPARTMENT OF TRANSPORTATION
BUREAU OF DESIGN

BEAVER COUNTY
L.R. 04017 SEC. 6 STA. 49 + 74
REHABILITATION OF THE KOPPEL BRIDGE
OVER THE
P. & L.E. R.R., PENN CENTRAL R.R. & BEAVER RIVER
GENERAL SUBSTRUCTURE PLAN, NOTES & DETAILS

APPROVED MAR 9 1976
B.Z. Kotalik
BRIDGE ENGINEER
0021054

SHEET 2 OF 33
S-11862

K&E 17 0453 5-73 W2711

7530-2350-0200

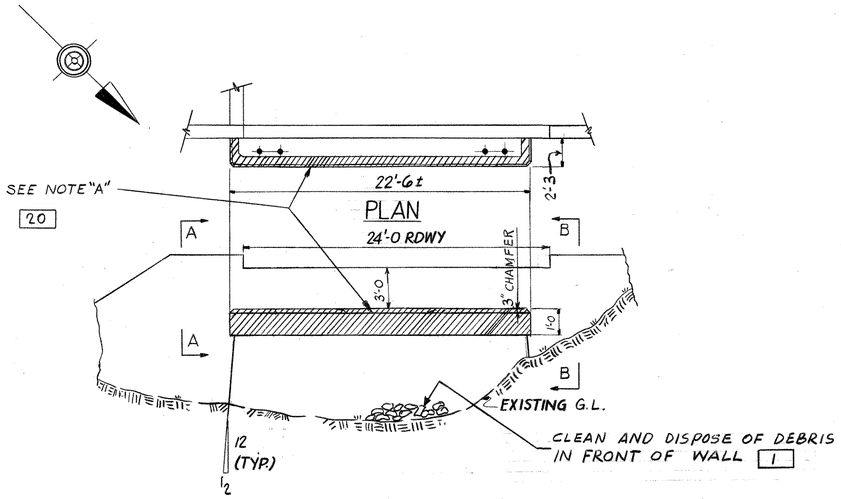

WEST ABUTMENT (No. 0)
EAST FACE ELEVATION

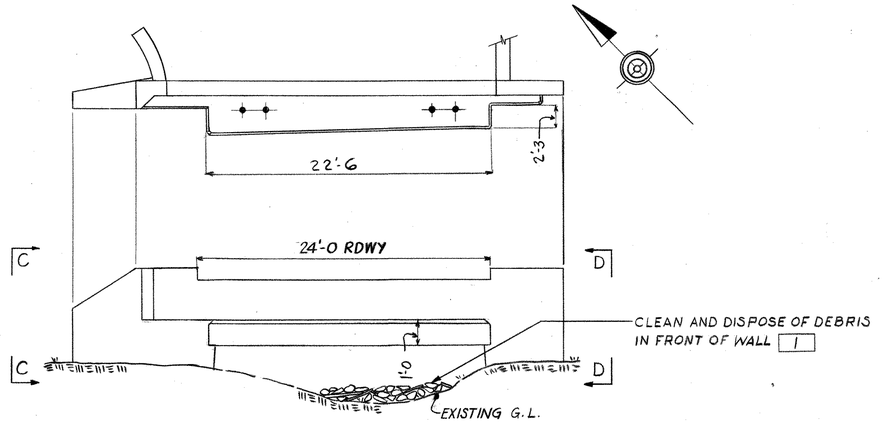

EAST ABUTMENT (No. 12)
WEST FACE ELEVATION

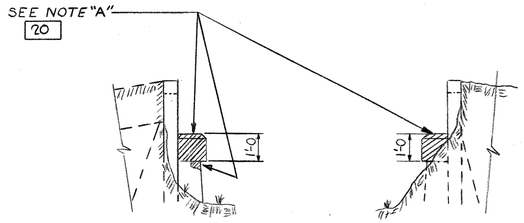

VIEW A-A VIEW B-B

WEST ABUTMENT

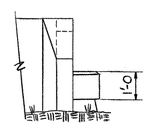

VIEW C-C

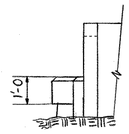

VIEW D-D

EAST ABUTMENT

NOTE "A"
FOR TYPICAL REPAIR METHOD REFER TO SHEET 2, CL. A CEMENT CONCRETE, SPECIAL

Mark	Description	By	Chk'd.	App'd.	Date
REVISIONS					

Commonwealth of Pennsylvania
DEPARTMENT OF TRANSPORTATION
BUREAU OF DESIGN

BEAVER COUNTY
L.R. 04017 SEC. 6 STA. 49 + 74
REHABILITATION OF THE KOPPEL BRIDGE
OVER THE
P. & L.E. R.R., PENN CENTRAL R.R. & BEAVER RIVER
ABUTMENT REPAIRS

APPROVED MAR 9 1976
B J Kotalik
BRIDGE ENGINEER

0021055

SHEET 3 OF 33

S-11862

K&E 19 1153 9-73 W2711+

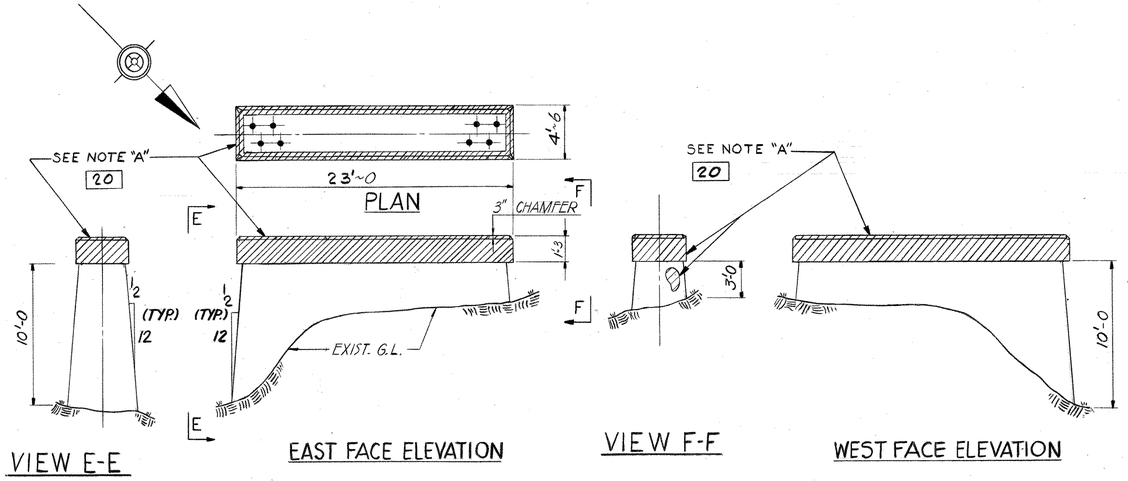

PIER NO.1

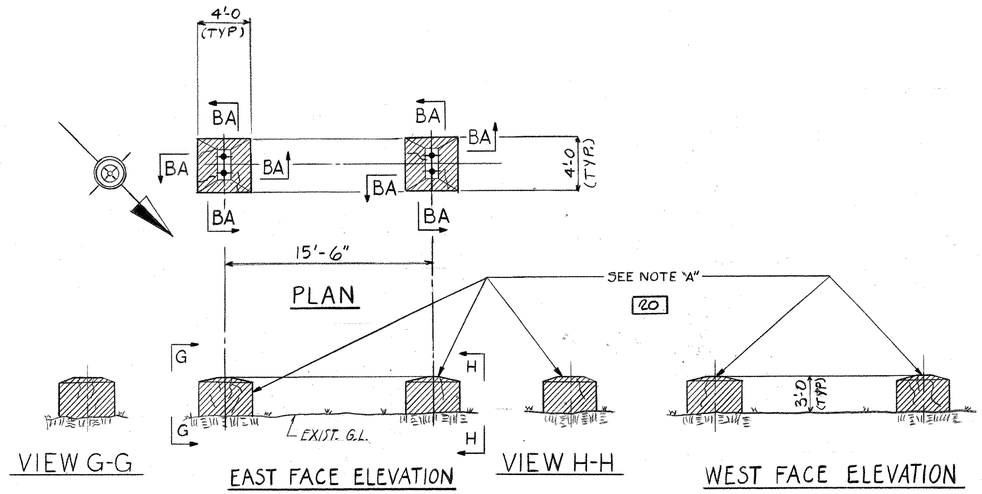

PIER NO.2

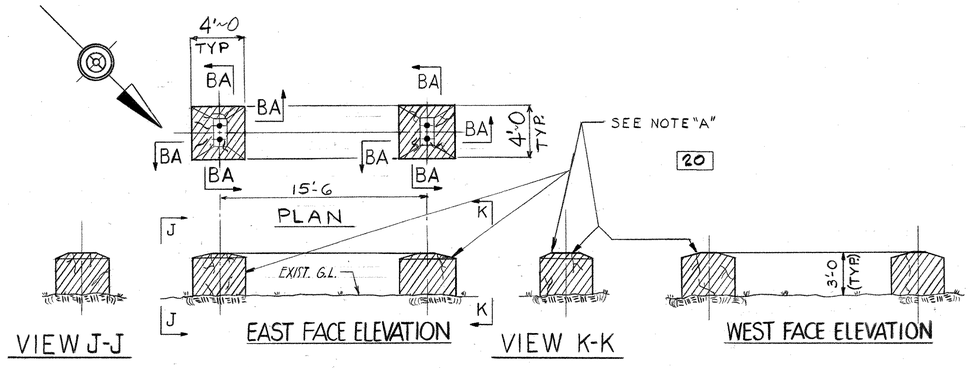

PIER NO.3

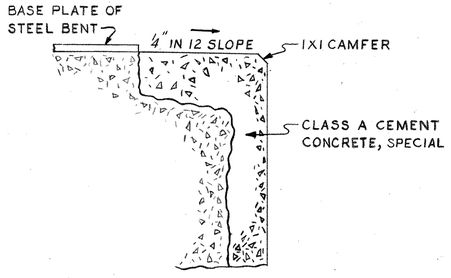

SECTION "BA"

NOTE "A"

FOR TYPICAL REPAIR METHOD REFER TO SHEET 2, CL. A CEMENT CONC., SPECIAL

Mark	Description	By	Chk'd.	App'd.	Date
REVISIONS					

Commonwealth of Pennsylvania
DEPARTMENT OF TRANSPORTATION
BUREAU OF DESIGN

BEAVER COUNTY
L.R.04017 SEC. 6 STA. 49 + 74

REHABILITATION OF THE KOPPEL BRIDGE

OVER THE
P & L.E. R.R., PENN CENTRAL R.R. & BEAVER RIVER
REPAIRS TO PIERS 1, 2 & 3

APPROVED MAR 9 1976

B.Z. Kotalik
BRIDGE ENGINEER

0021056

SHEET 4 OF 33

S-11862

7530-2350-0200

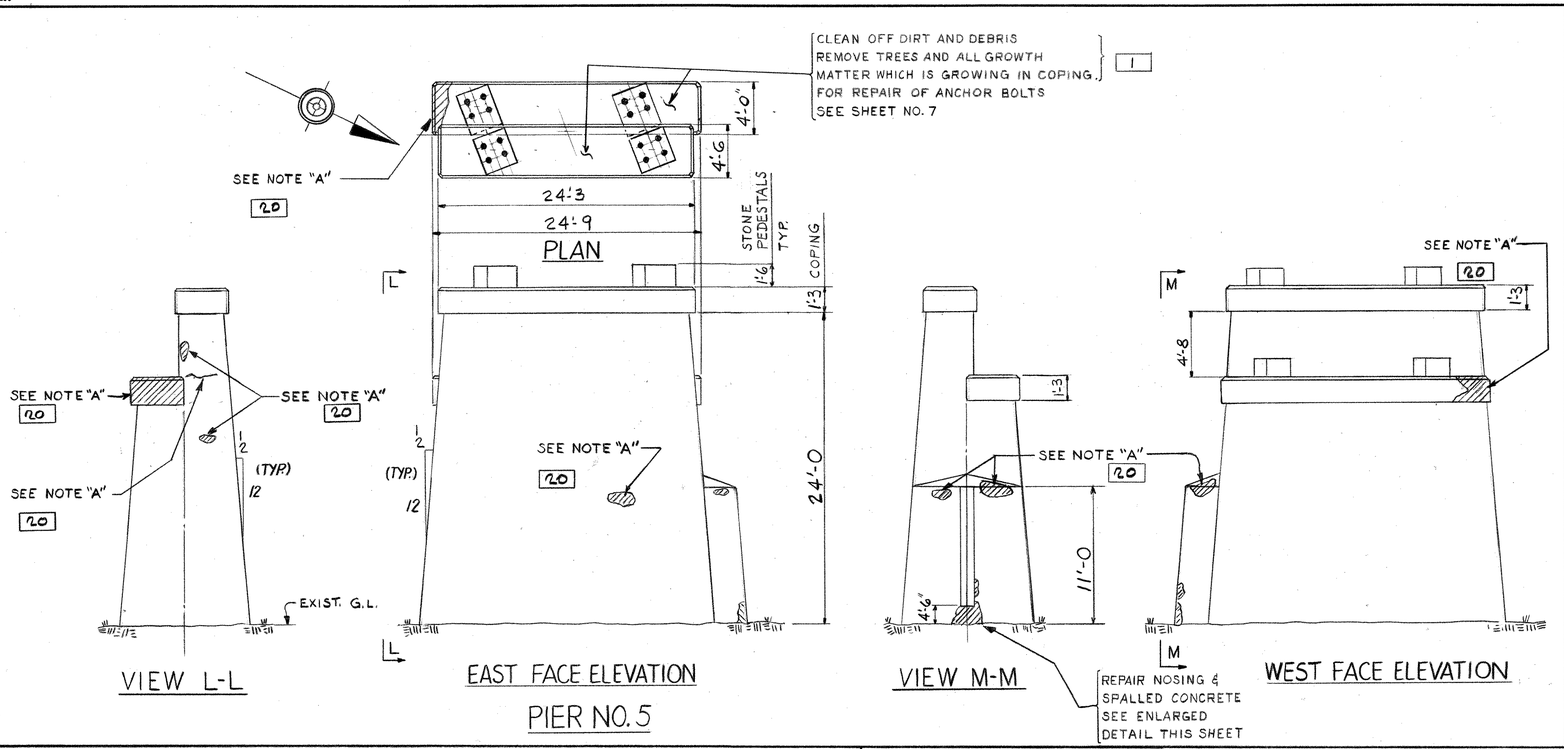

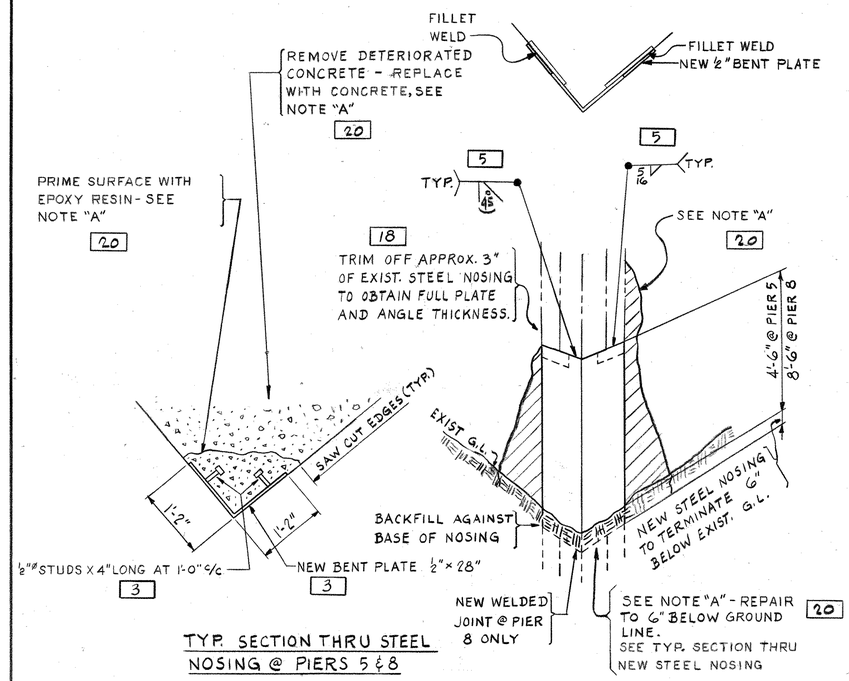

TYP. SECTION THRU STEEL NOSING @ PIERS 5 & 8

DETAIL OF REPAIR OF STEEL NOSING @ PIERS 5 & 8

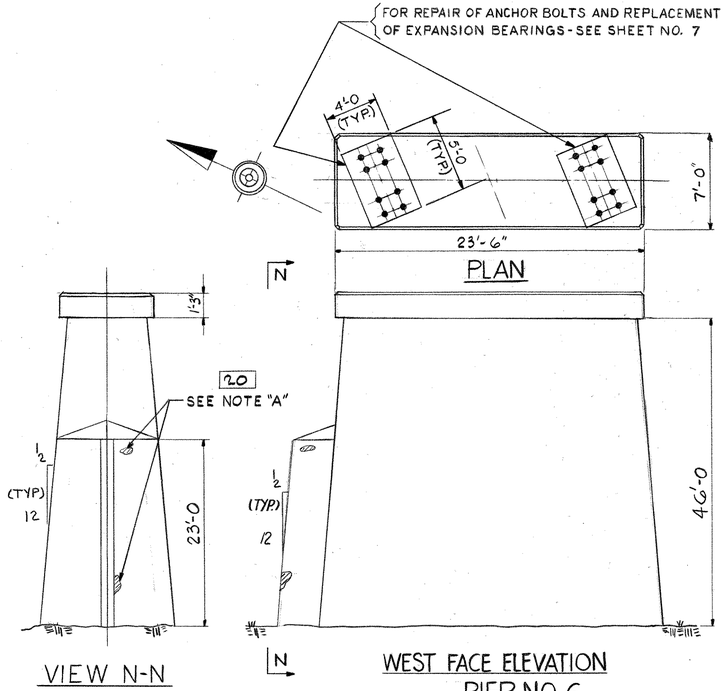

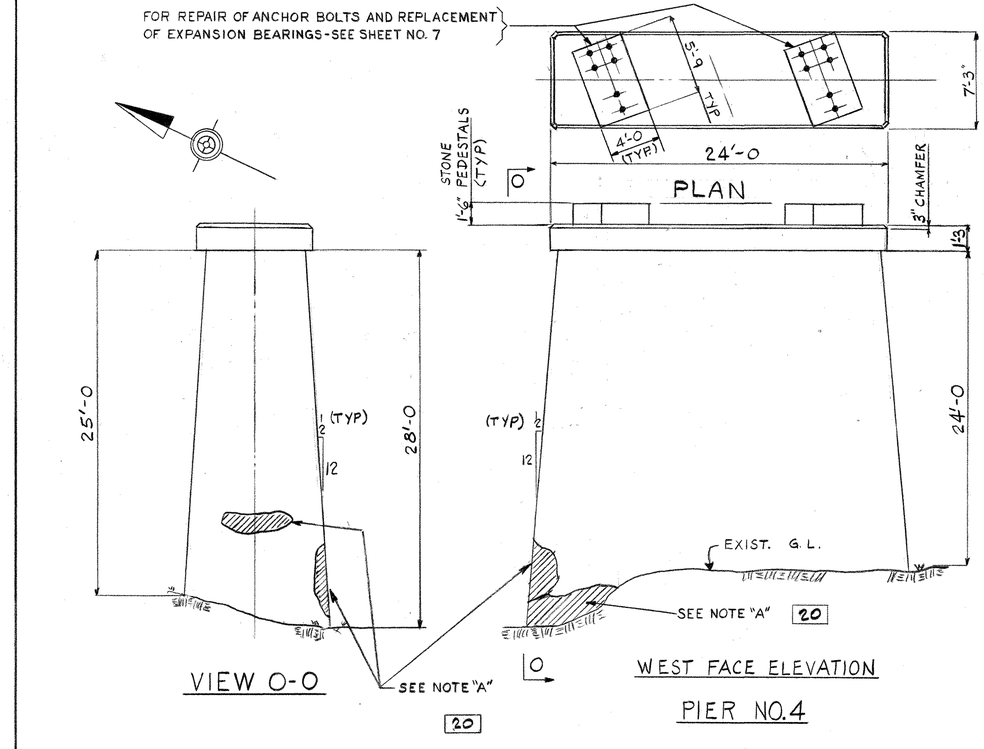

NOTE "A"

FOR TYPICAL REPAIR METHOD REFER TO SHEET 2, CLASS A CEMENT CONCRETE, SPECIAL

Mark	Description	By	Chk'd.	App'd.	Date
REVISIONS					

Commonwealth of Pennsylvania
DEPARTMENT OF TRANSPORTATION
BUREAU OF DESIGN

BEAVER COUNTY
L.R. 04017 SEC. 6 STA. 49 + 74

REHABILITATION OF THE KOPPEL BRIDGE

OVER THE
P. & L.E. R.R., PENN CENTRAL R.R. & BEAVER RIVER
REPAIRS TO PIERS 4, 5 & 6

APPROVED MAR 9 1976
B.J. Kotalik
BRIDGE ENGINEER

0021057

SHEET 5 OF 33

S-11862

K&E 19 1153 9-73 W2711-

7530-2350-0200

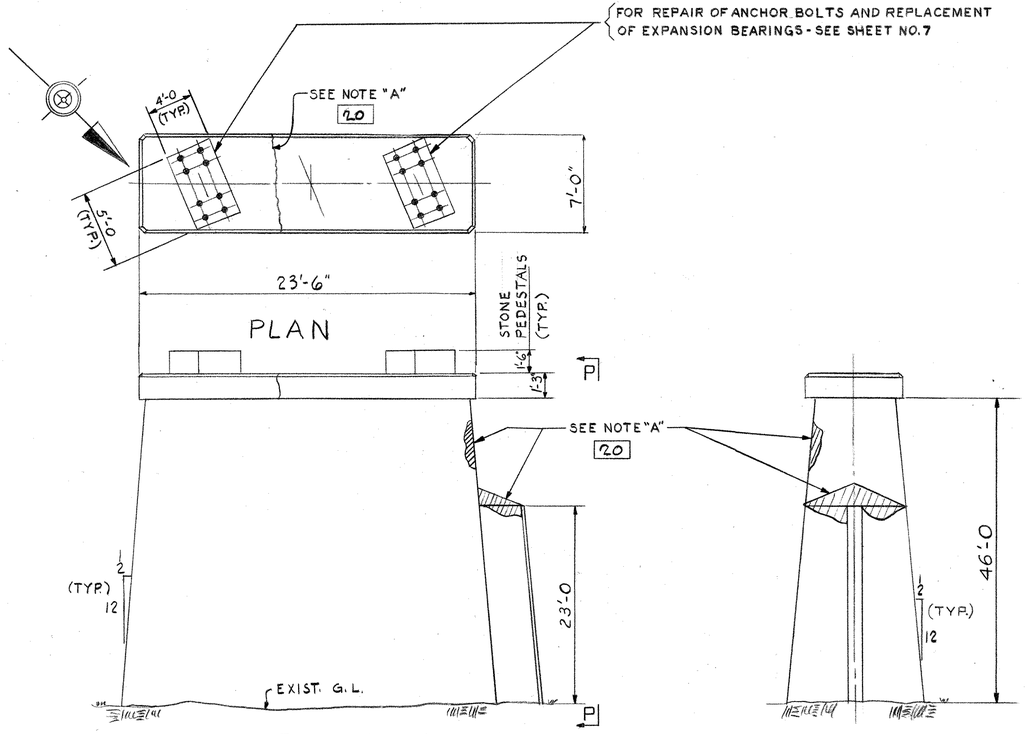

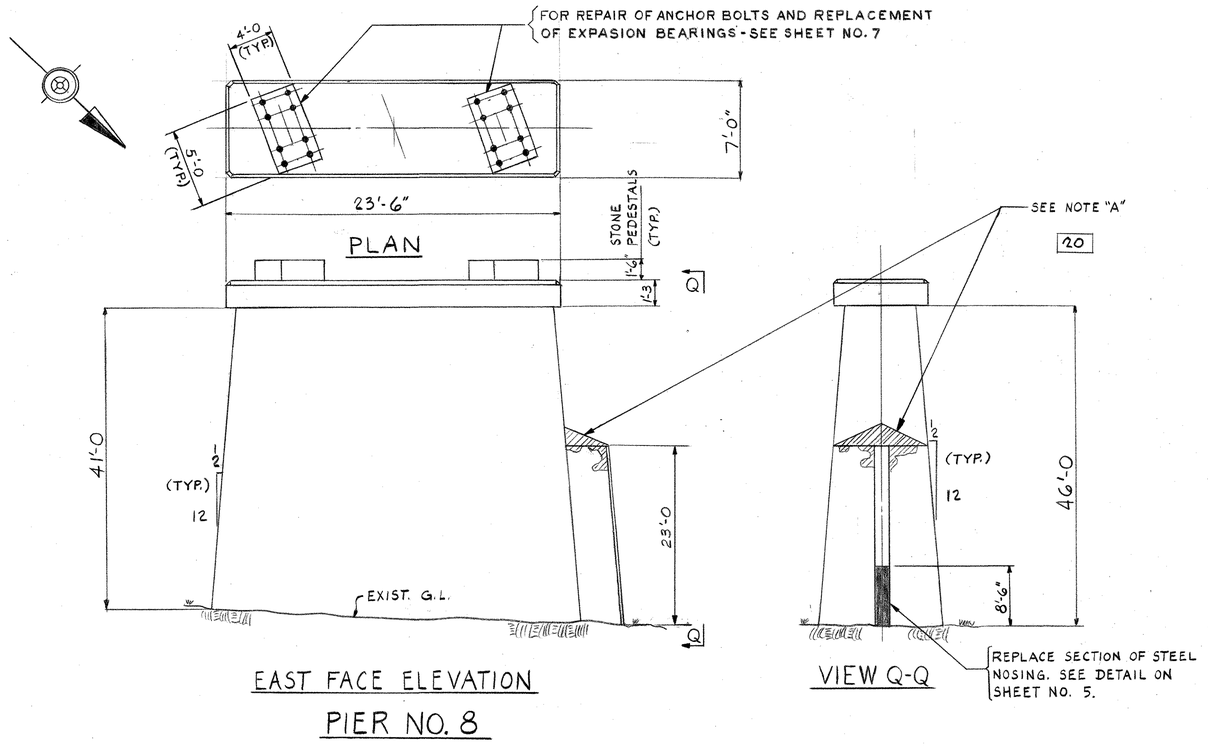

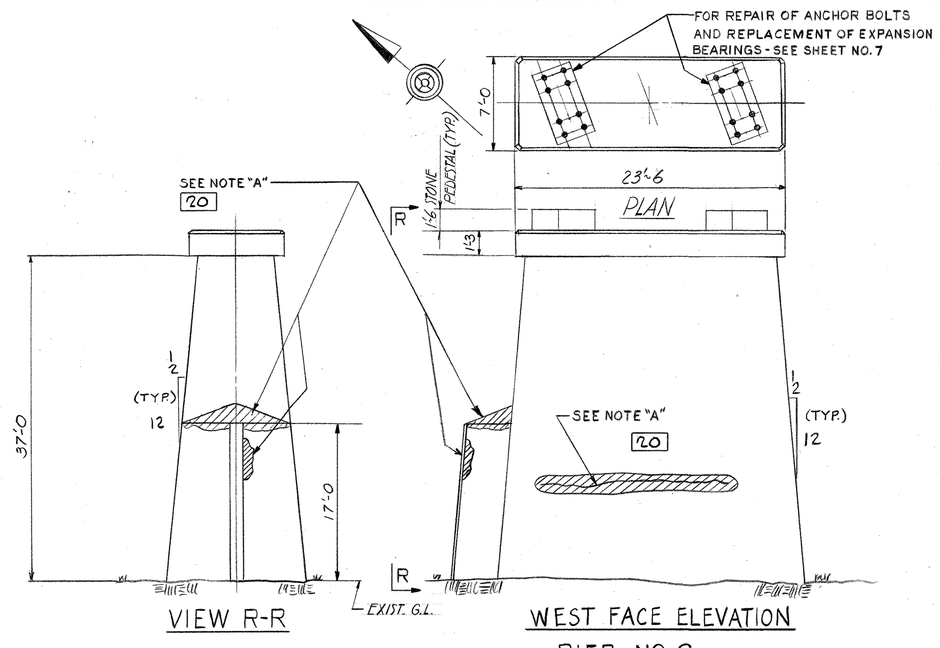

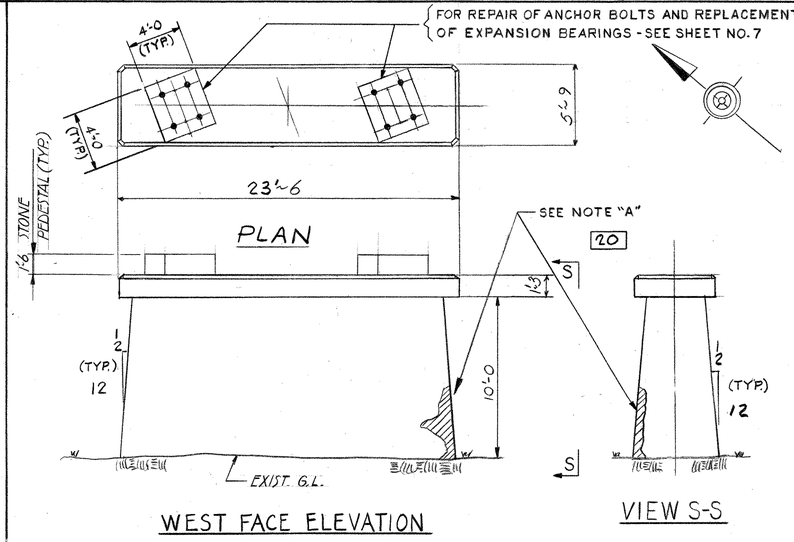

NOTE "A"

FOR TYPICAL REPAIR METHOD
REFER TO SHEET 2, CL. A
CEMENT CONCRETE, SPECIAL

Mark	Description	By	Chk'd.	App'd.	Date
	REVISIONS				

Commonwealth of Pennsylvania
DEPARTMENT OF TRANSPORTATION
BUREAU OF DESIGN

BEAVER COUNTY
L.R. 04017 SEC. 6 STA. 49 + 74

REHABILITATION OF THE KOPPEL BRIDGE

OVER THE
P & L.E. R.R., PENN CENTRAL R.R. & BEAVER RIVER
REPAIRS TO PIERS 7, 8, 9 & 10

APPROVED MAR 9 1976
B Z Katalil
BRIDGE ENGINEER

0021058

SHEET 6 OF 33

S-11862

K&E 19 1153 9-73 W2711-

7530-2350-0200

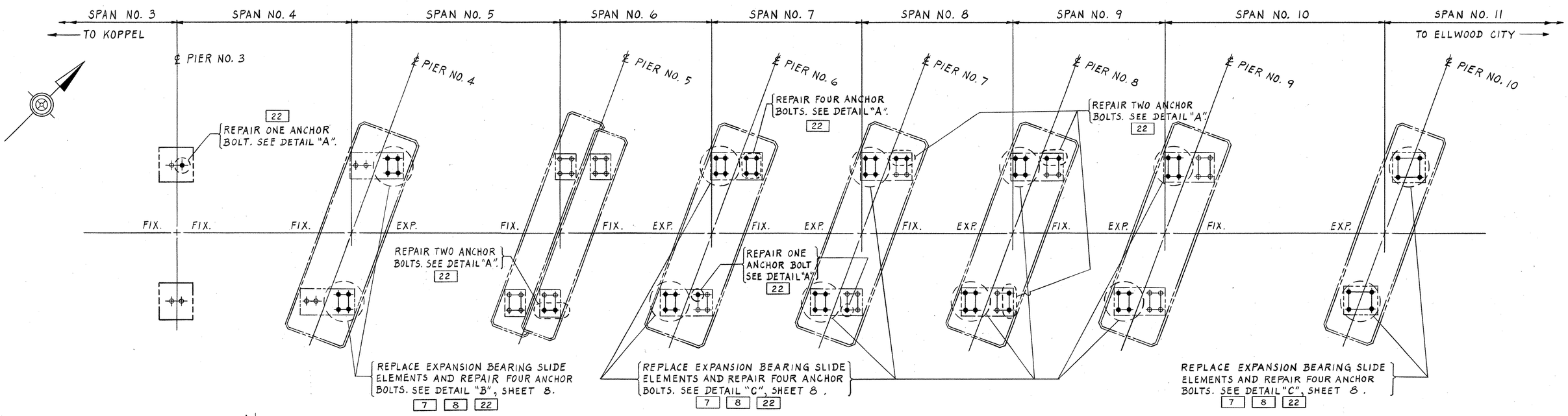

ANCHOR BOLT PLAN

(N.T.S.)

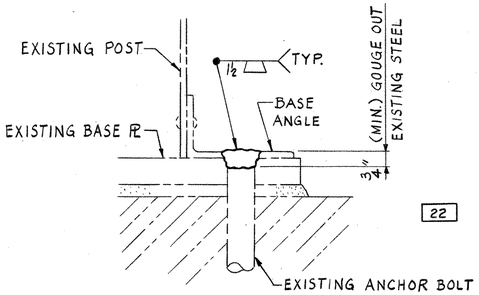

DETAIL "A"

REPAIRS TO ANCHOR BOLTS AT FIXED BEARINGS

CONSTRUCTION PROCEDURE (FIXED BEARINGS)

1. REMOVE DETERIORATED PORTION OF EXISTING ANCHOR BOLT DOWN TO THE TOP SURFACE OF THE BASE ANGLE.
2. GOUGE OUT EXISTING ANCHOR BOLT AND HOLE AS SHOWN (AIR-ARC METHOD) TO SOUND METAL AND FILL CAVITY WITH WELD METAL FLUSH WITH SURFACE OF EXISTING BASE ANGLE.

SHOE REACTIONS (IN KIPS PER SHOE)			
LOCATION		JACKING REACTION D.L. (ONLY)	MAX. REACTION D.L.+L.L.+I.
EXP. SHOES	SPAN-5, PIER-4	247	409.1
EXP. SHOES	SPAN-6, PIER-6	154	282.6
EXP. SHOES	SPAN-7, PIER-7	154	282.6
EXP. SHOES	SPAN-8, PIER-8	154	282.6
EXP. SHOES	SPAN-9, PIER-9	154	282.6
EXP. SHOES	SPAN-10, PIER-10	182	321.2

NOTES FOR EXPANSION BEARINGS

1. FOR DETAILS OF TRAFFIC RESTRICTIONS AND PROTECTION OF EXISTING UTILITIES ON THE BRIDGE DURING JACKING OF THE SUPERSTRUCTURE AND REPLACEMENT OF THE EXPANSION BEARINGS REFER TO THE CONTRACT SPECIAL PROVISIONS.
2. NEW TFE (POLYTETRAFLUOROETHYLENE) BEARINGS SHALL MEET THE REQUIREMENTS OF THE 1974 AASHTO INTERIM SPECIFICATIONS-BRIDGES, SECTIONS 14 & 27 (INTERIMS 16 & 23), AND SHALL BE THE TYPE SHOWN ON SHEET NO. 8.
3. CONSTRUCTION PROCEDURES FOR REPLACEMENT OF EXPANSION BEARINGS AT PIERS NO. 4,6,7,8,9 & 10 SHALL BE AS FOLLOWS:
   a. REMOVE TOPS OF EXISTING ANCHOR BOLTS OF BEARING BEING REPLACED DOWN TO TOP SURFACE OF EXISTING MASONRY PLATE.
   b. JACK SUPERSTRUCTURE TO RELIEVE PRESSURE ON BEARING AND SHORE UP. (THE CONTRACTOR IS LIMITED TO TWO (2) INCHES MAXIMUM JACKING OF THE SUPERSTRUCTURE, SEE SPECIAL PPOVISIONS.
   c. REMOVE EXISTING NUTS AND INSTALL PILOT AND DRIVING NUTS ON PINS.
   d. MATCH-MARK EXISTING PIN AND BEARING SHOE AND REMOVE.
   e. REMOVE EXISTING STEEL UPPER SLIDE BEARING ELEMENT FROM SHOE AND INSTALL NEW TFE UPPER ELEMENT ASSEMBLY IN PROPER POSITION ON SHOE.
   f. REMOVE EXISTING MASONRY PLATE AND EXISTING GROUT.
   g. INSTALL NEW MASONRY PLATE AND TFE LOWER ELEMENT ASSEMBLY IN PROPER POSITION. GROUT MASONRY PLATE TO PROPER ELEVATION.
   h. CLEAN AND PAINT CONTACT SURFACES OF SHOE AND TRUSS IN ACCORDANCE WITH THE GENERAL NOTES ON SHEET NO. 1.
   j. INSTALL SHOE, PIN AND NUTS, NOTING MATCH-MARKS.
   k. LOWER SUPERSTRUCTURE TO PROPER POSITION.
   m. INSTALL NEW ANCHOR BOLT EXTENSIONS.
   n. CHECK POSITION OF SLOTS IN EXISTING SOLE PLATE AND EXTEND SLOTS AS NECESSARY TO PROVIDE FOR PROPER MOVEMENT OF SHOE.

NOTE

WORK THIS SHEET IN CONJUNCTION WITH SHEET 8.

Mark	Description	By	Chk'd.	App'd.	Date
	REVISIONS				

Commonwealth of Pennsylvania
DEPARTMENT OF TRANSPORTATION
BUREAU OF DESIGN

BEAVER COUNTY
L.R. 04017 SEC. 6 STA. 49 + 74

REHABILITATION OF THE KOPPEL BRIDGE

OVER THE
P. & L.E. R.R., PENN CENTRAL R.R. & BEAVER RIVER
REPAIRS TO BEARINGS

APPROVED MAR 9 1976
B Z Kotalik
BRIDGE ENGINEER
0021059

SHEET 7 OF 33

S-11862

K&E 19 1153 9-73 W2711+

7530-2350-0200

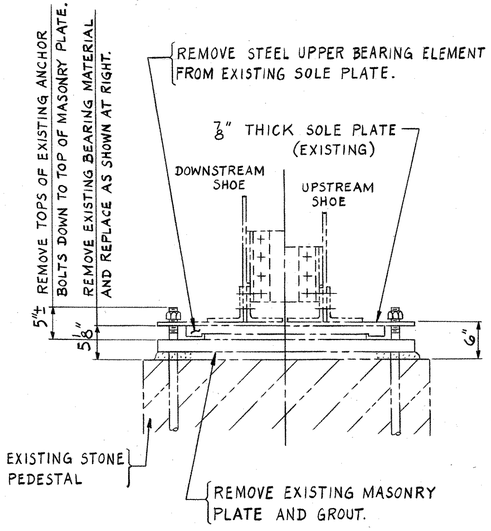

DETAIL "B"

EXISTING BEARING AT PIER NO. 4

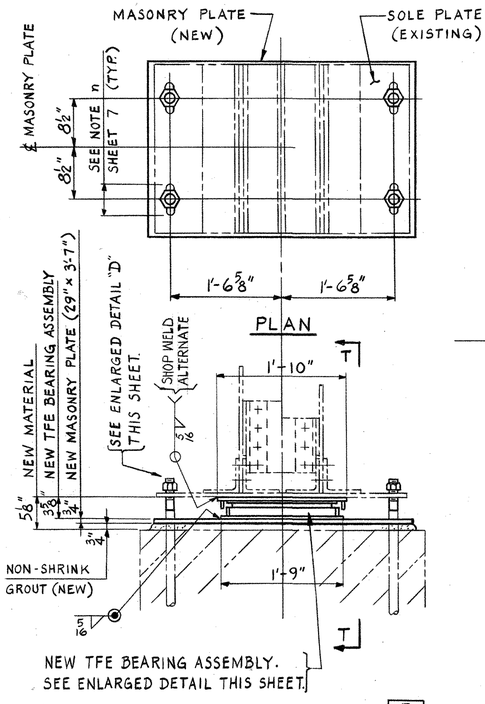

DETAIL "B"

REBUILT BEARING AT PIER NO. 4

7 8 22

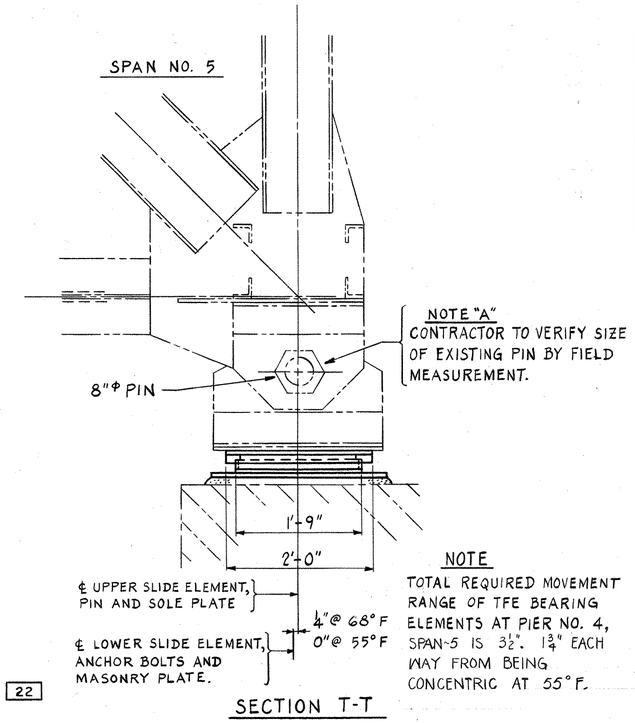

SECTION T-T

NOTE

TOTAL REQUIRED MOVEMENT RANGE OF TFE BEARING ELEMENTS AT PIER NO. 4, SPAN-5 IS 3½". 1¾" EACH WAY FROM BEING CONCENTRIC AT 55° F.

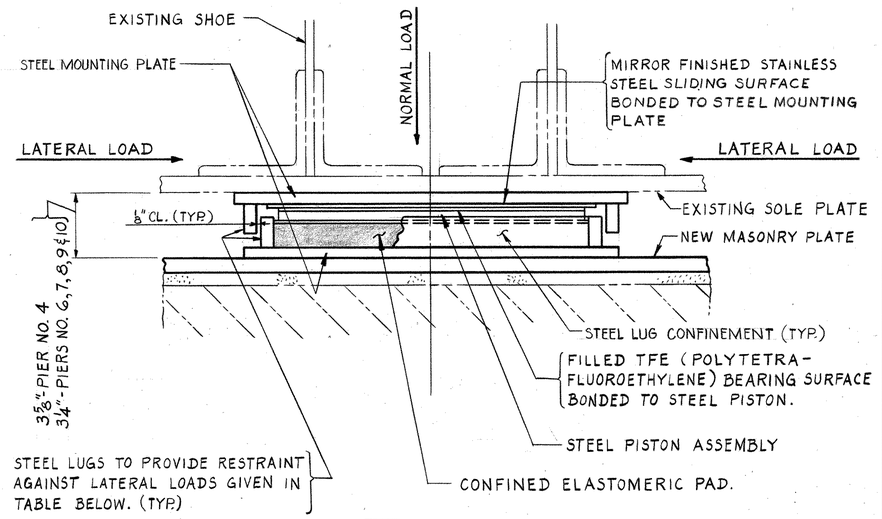

7

ENLARGED DETAIL OF NEW TFE BEARING

NOTE

THE TFE BEARING ASSEMBLY ARRANGEMENT SHOWN ABOVE IS PREFERRED. HOWEVER, VARIATIONS FROM THE ARRANGEMENT MAY BE ACCEPTABLE IF APPROVED BY THE ENGINEER. THE BEARING MUST BE ABLE TO WITHSTAND THE LOADS SHOWN IN THE TABLE AT THE RIGHT.

BEARING LOADS *		
LOCATION	NORMAL LOAD	LATERAL LOAD
PIER NO. 4	425	42.5
PIERS NO. 6,7,8 ℄ 9	300	30.0
PIER NO. 10	325	32.5

* LOADS SHOWN ARE IN KIPS

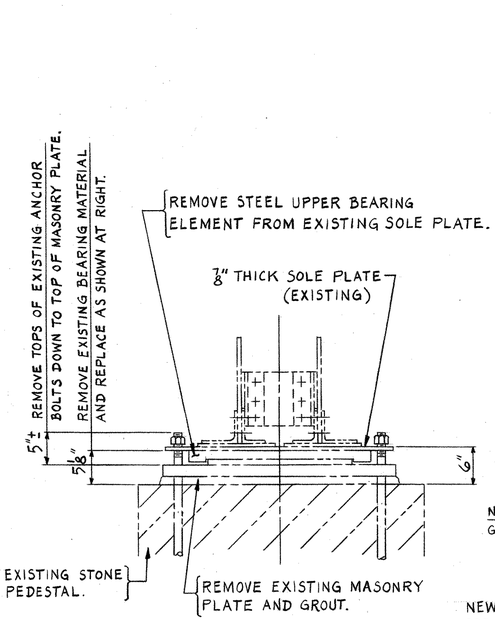

DETAIL "C"

EXISTING BEARING AT PIERS NO. 6,7,8,9 & 10

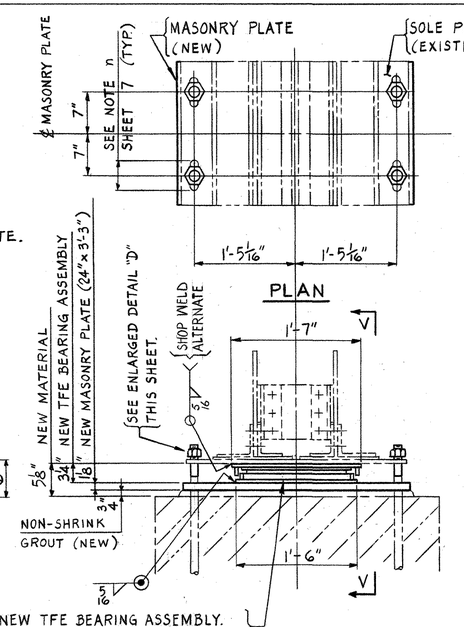

DETAIL "C"

REBUILT BEARING AT PIERS NO. 6,7,8,9 & 10

7 8 22

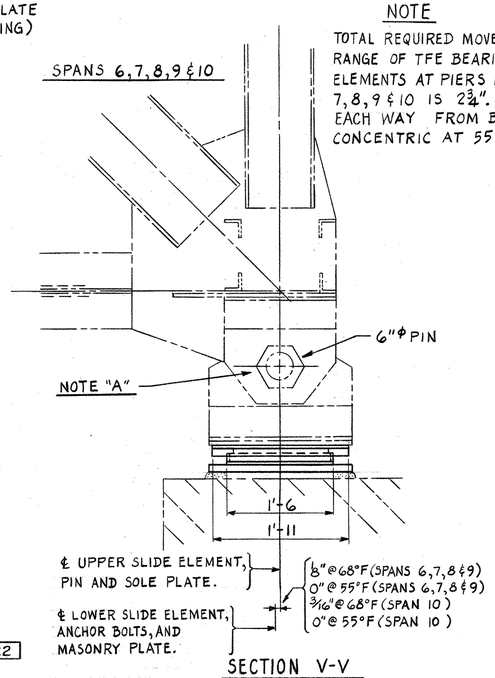

SECTION V-V

NOTE

TOTAL REQUIRED MOVEMENT RANGE OF TFE BEARING ELEMENTS AT PIERS NO. 6, 7,8,9 & 10 IS 2¾". 1⅜" EACH WAY FROM BEING CONCENTRIC AT 55° F.

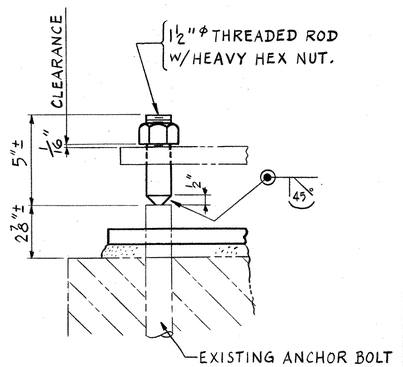

22

DETAIL "D"

(ANCHOR BOLT EXTENSIONS)
(4 PER BEARING)

NOTE

WORK THIS SHEET IN CONJUNCTION WITH SHEET 7.

Mark	Description	By	Chk'd.	App'd.	Date
REVISIONS					

Commonwealth of Pennsylvania
DEPARTMENT OF TRANSPORTATION
BUREAU OF DESIGN

BEAVER COUNTY
L.R. 04017 SEC. 6 STA. 49 + 74

REHABILITATION OF THE KOPPEL BRIDGE
OVER THE
BEAVER RIVER
REPAIRS TO BEARINGS

APPROVED MAR 9 1976
B Z Kotalik
BRIDGE ENGINEER
0021060

SHEET 8 OF 33

S-11862

K&E 19 1153 9-73 W2711•

7530-2350-0200

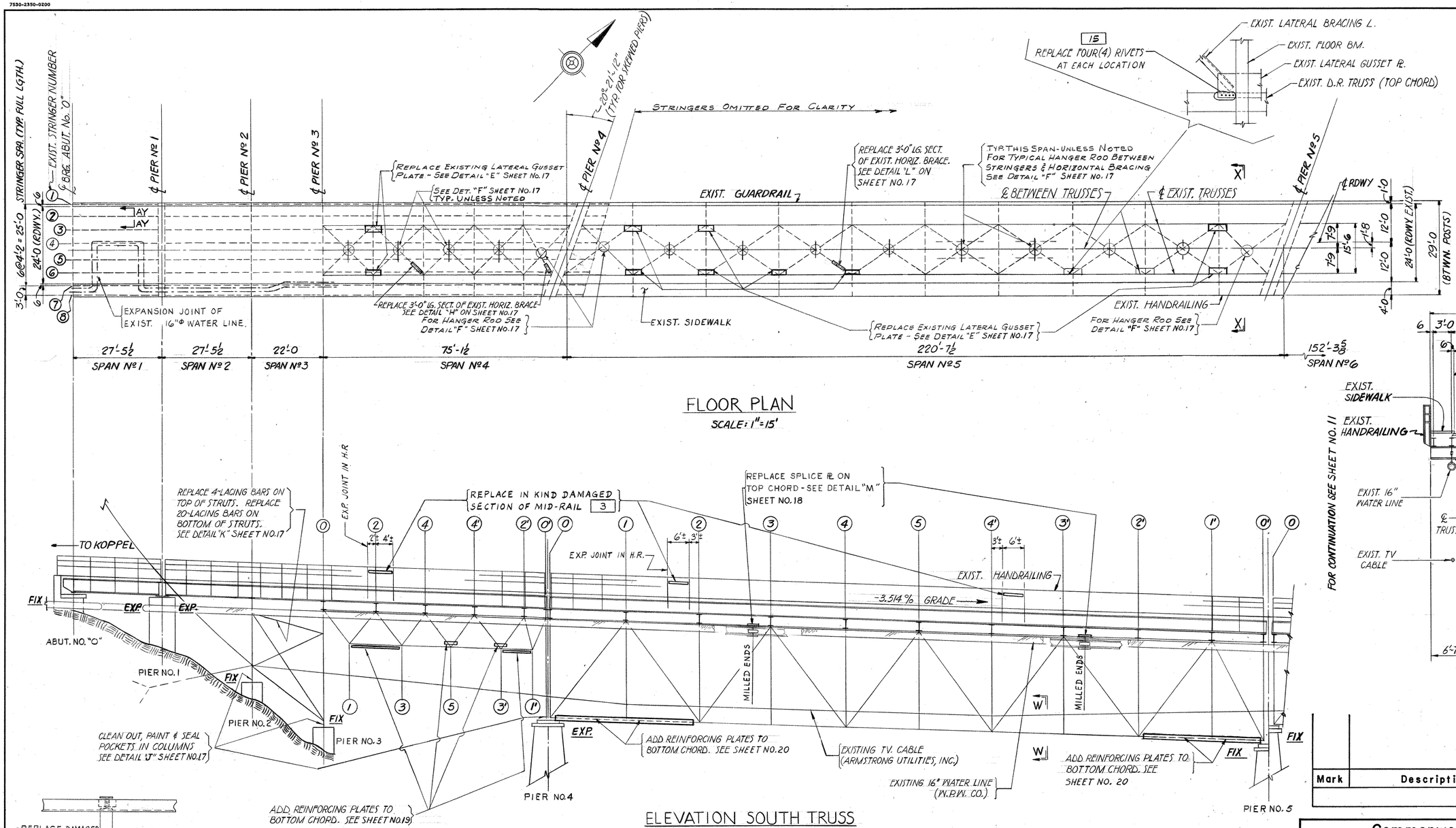

FLOOR PLAN

SCALE: 1" = 15'

ELEVATION SOUTH TRUSS

LOOKING UPSTREAM

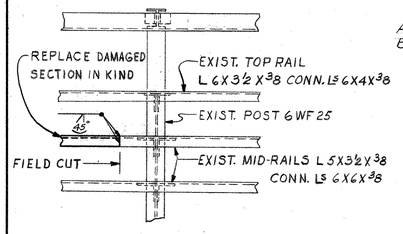

TYP. HANDRAIL REPAIR

SCALE ½" = 1'-0

3

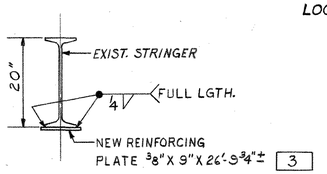

3

SECTION "AY-AY"

(SPAN 1 - STRINGER NO. 2)

SCALE ¾" = 1'-0"

NOTE "C"

CLEAN OUT TIGHTLY PACKED CORROSION BETWEEN BOTT. CHORD ANGLES, FULL LGTH., IN ACCORDANCE WITH FORM 409/73, SECTION 1073.01 (c) METHOD B - POWER TOOL CLEANING. PAINT THE AFFECTED AREA AND 2" BEYOND IN ACCORDANCE WITH THE SPECIAL PROVISIONS.

3

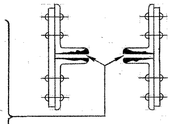

SECTION W-W

NO SCALE

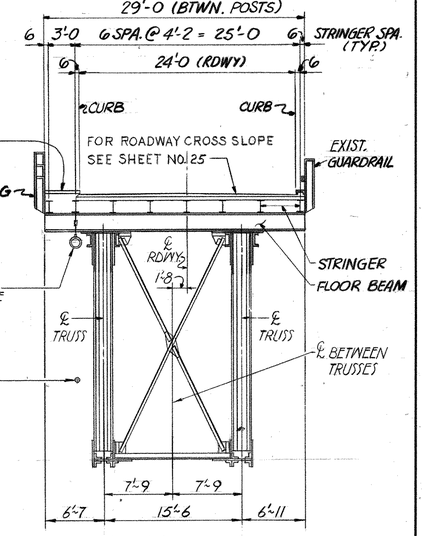

SECTION X-X

(LOOKING WEST)

SCALE: ⅛" = 1'-0

Mark	Description	By	Chk'd.	App'd.	Date
	REVISIONS				

Commonwealth of Pennsylvania
DEPARTMENT OF TRANSPORTATION
BUREAU OF DESIGN

BEAVER COUNTY
L.R. 04017 SEC. 6 STA. 49 + 74

REHABILITATION OF THE KOPPEL BRIDGE

OVER THE
P. & L.E. R.R., PENN CENTRAL R.R. & BEAVER RIVER
SUPERSTRUCTURE REPAIRS, SPANS 1, 2, 3, 4 & 5

APPROVED MAR 9 1976
B J Kotalik
BRIDGE ENGINEER

0021061

SHEET 9 OF 33

S-11862

K&E 19 1153 9-73 W2711•

7530-2350-0200

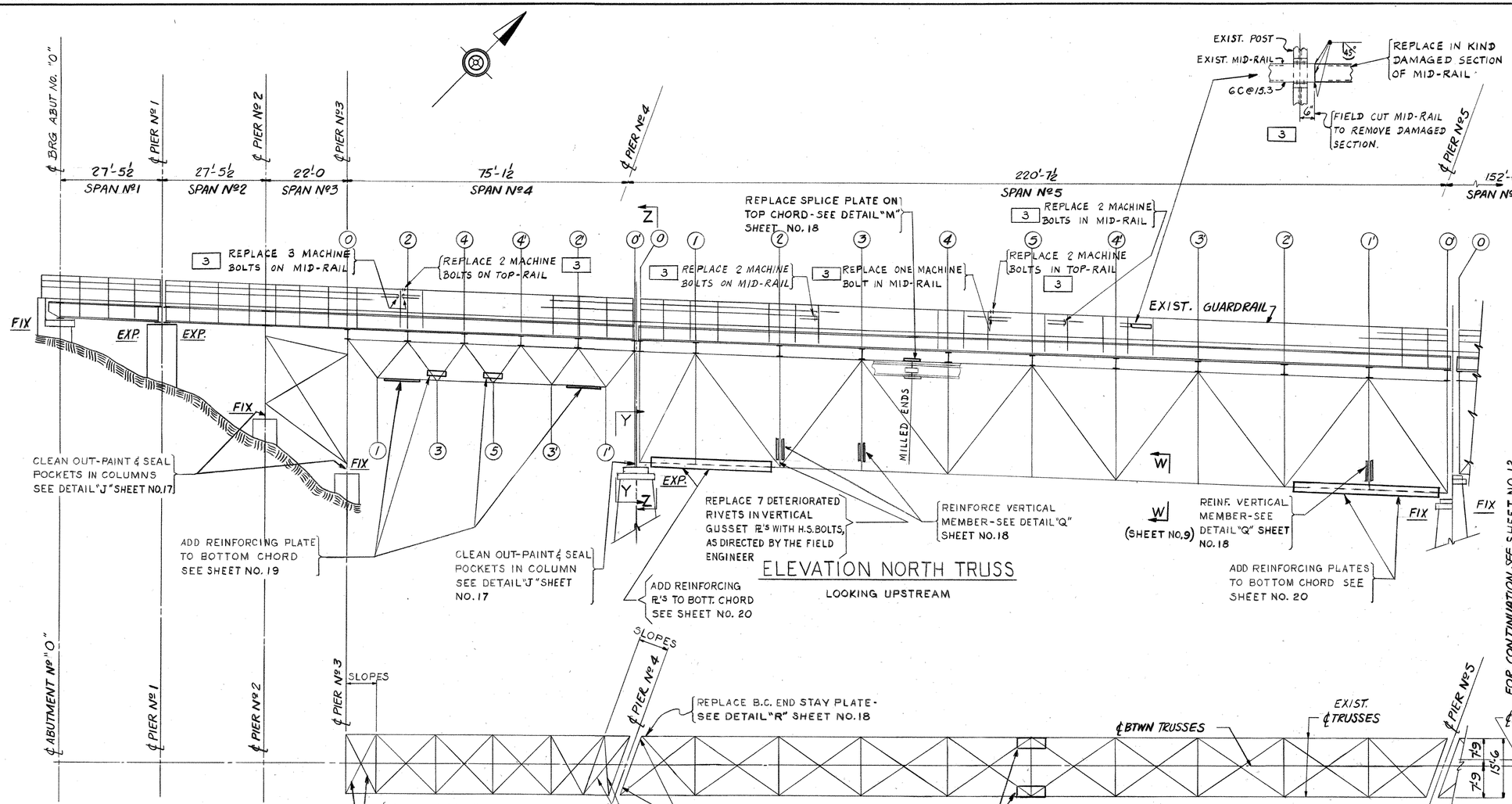

Mark	Description	By	Chk'd.	App'd.	Date
REVISIONS					

Commonwealth of Pennsylvania
DEPARTMENT OF TRANSPORTATION
BUREAU OF DESIGN

BEAVER COUNTY
L.R. 04017 SEC. 6 STA. 49 + 74

REHABILITATION OF THE KOPPEL BRIDGE
OVER THE
P & L.E. R.R., PENN CENTRAL R.R. & BEAVER RIVER
SUPERSTRUCTURE REPAIRS, SPANS 1,2,3,4 & 5

APPROVED MAR 9 1976
B.J. Kotalik
BRIDGE ENGINEER
0021062

SHEET 10 OF 33

S-11862

K&E 19 1153 9-73 W2711+

7530-2350-0200

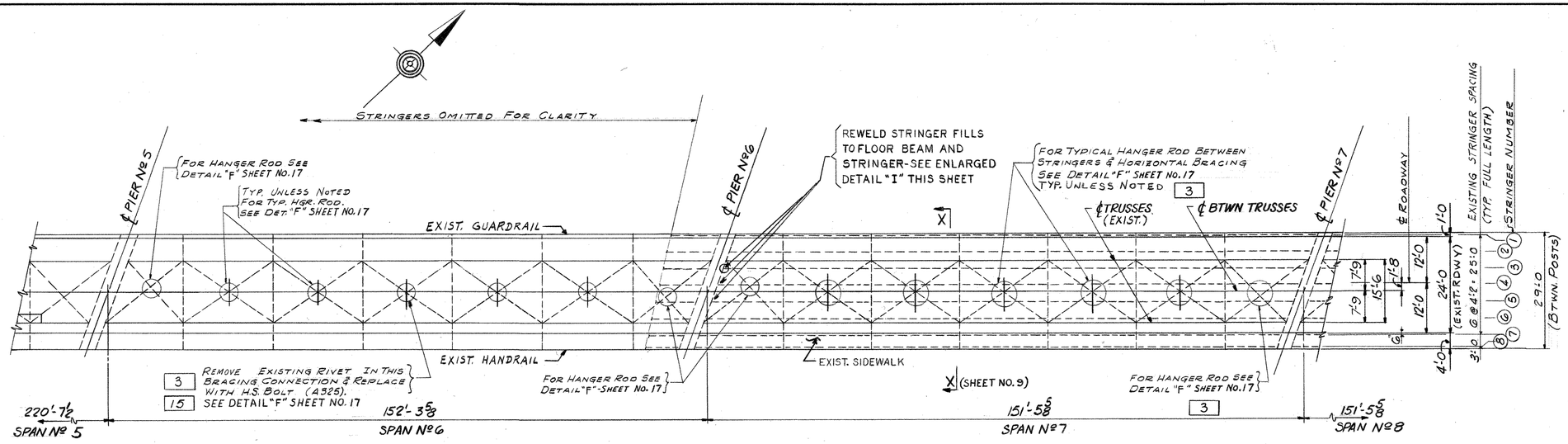

FLOOR PLAN

SCALE: 1" = 15'

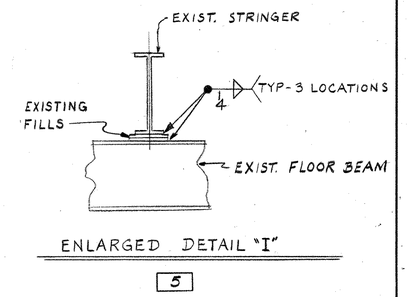

ENLARGED DETAIL "I"

5

FOR CONTINUATION SEE SHEET NO. 9

FOR CONTINUATION SEE SHEET NO. 13

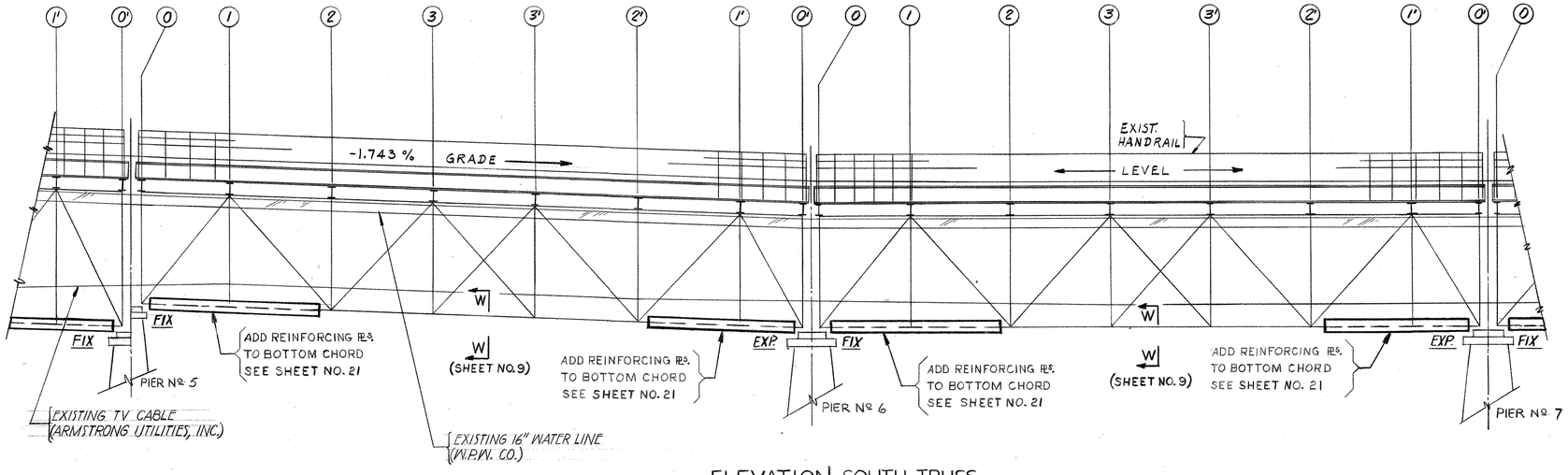

ELEVATION SOUTH TRUSS

LOOKING UPSTREAM

Mark	Description	By	Chk'd.	App'd.	Date
	REVISIONS				

Commonwealth of Pennsylvania
DEPARTMENT OF TRANSPORTATION
BUREAU OF DESIGN

BEAVER COUNTY
L.R. 04017 SEC. 6 STA. 49 + 74

REHABILITATION OF THE KOPPEL BRIDGE

OVER THE
P. & L.E. R.R., PENN CENTRAL R.R. & BEAVER RIVER
SUPERSTRUCTURE REPAIRS, SPANS 6 & 7

APPROVED MAR 9 1976
B J Kotalik
BRIDGE ENGINEER
0021063

SHEET 11 OF 33

S-11862

K&E 19 1153 9-73 W2711+

7530-2350-0200

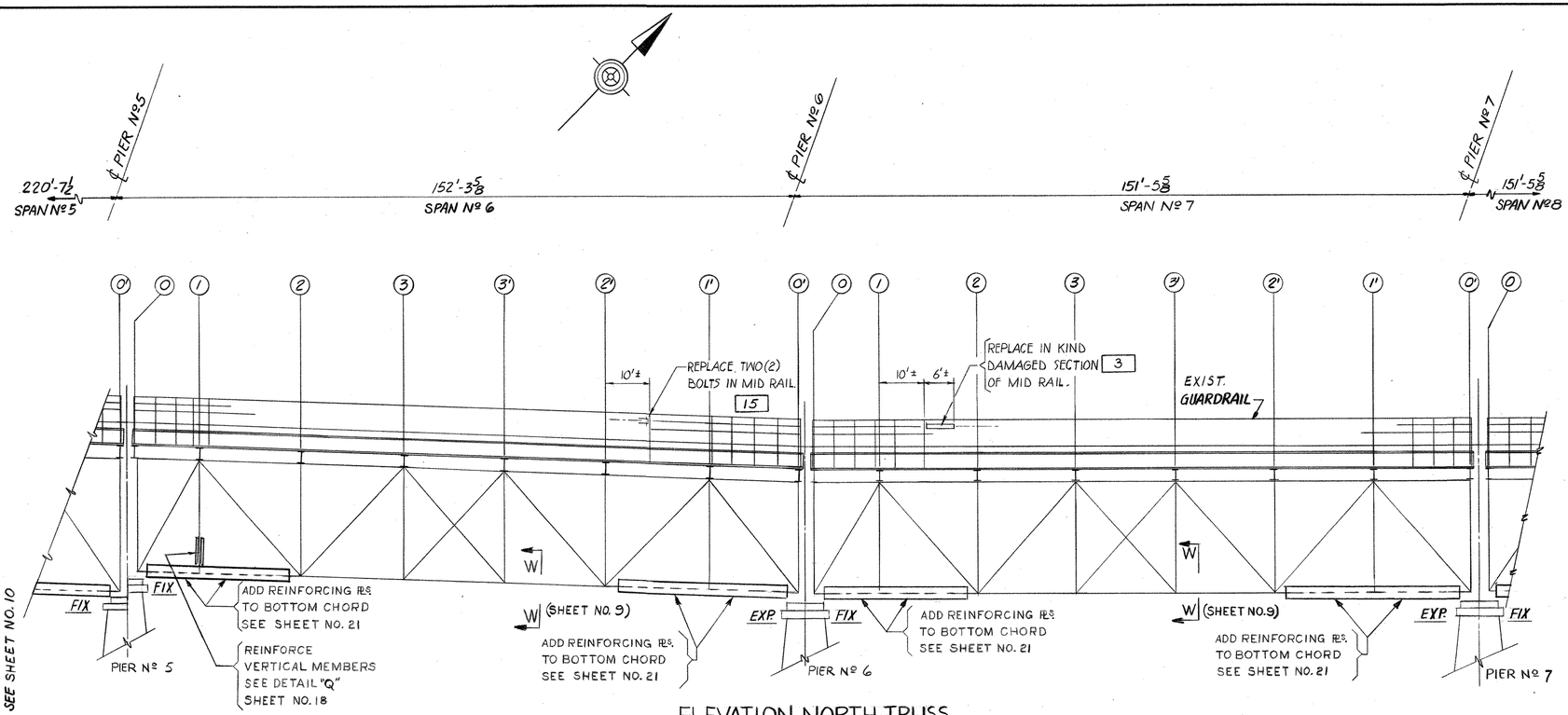

ELEVATION NORTH TRUSS

LOOKING UPSTREAM

FOR CONTINUATION SEE SHEET NO. 10

FOR CONTINUATION SEE SHEET NO. 14

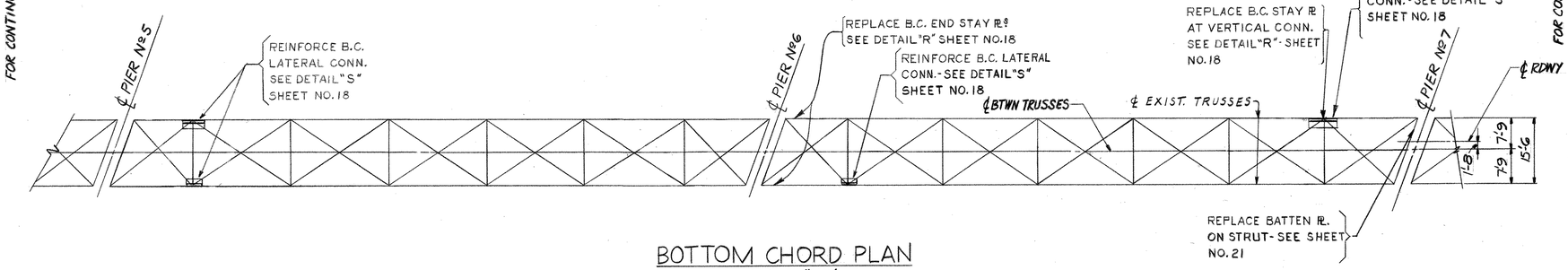

BOTTOM CHORD PLAN

SCALE: 1" = 15'

NOTE

FOR GUARDRAIL REPAIR AND MACHINE BOLT LOCATIONS SEE SHEET 10.

Mark	Description	By	Chk'd.	App'd.	Date
	REVISIONS				

Commonwealth of Pennsylvania
DEPARTMENT OF TRANSPORTATION
BUREAU OF DESIGN

BEAVER COUNTY
L.R. 04017 SEC. 6 STA. 49 + 74

REHABILITATION OF THE KOPPEL BRIDGE

OVER THE
P. & L.E. R.R., PENN CENTRAL R.R. & BEAVER RIVER
SUPERSTRUCTURE REPAIRS, SPANS 6 & 7

APPROVED MAR 9 1976
B J Kotalik
BRIDGE ENGINEER
0021064

SHEET 12 OF 33

S-11862

KDE 19 1153 9-73 W2711

7530-2350-0200

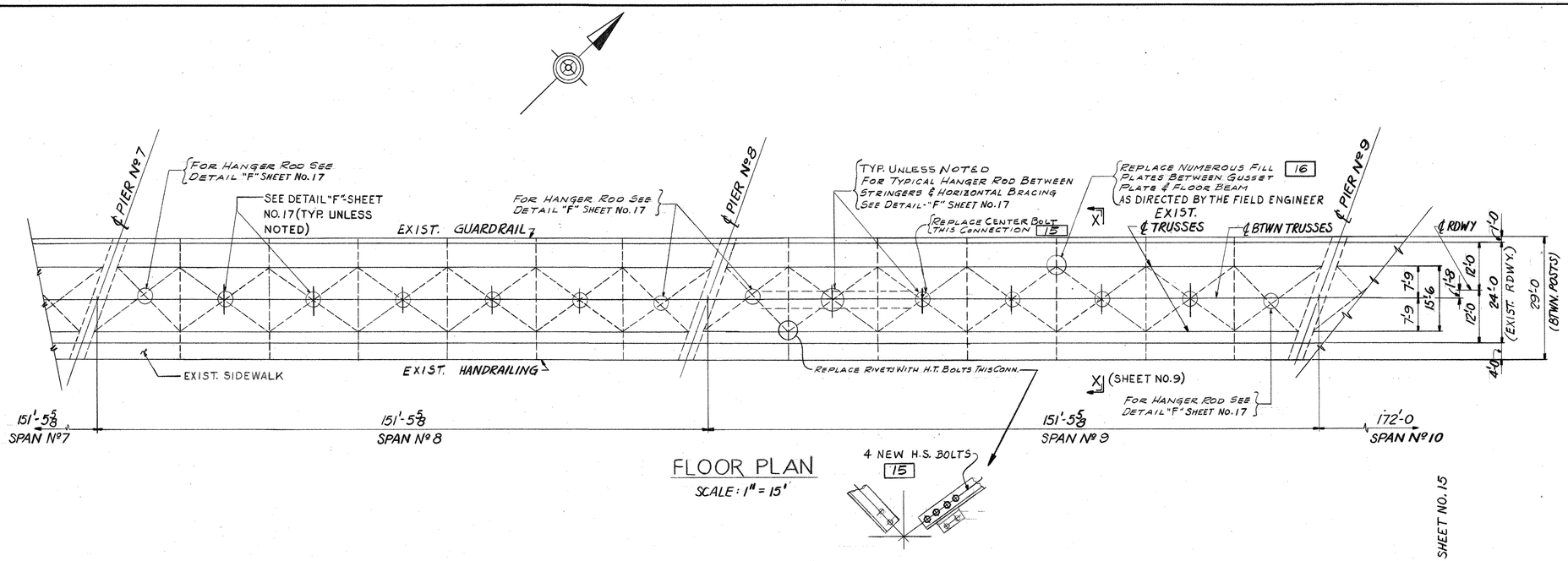

FLOOR PLAN

SCALE: 1" = 15'

FOR CONTINUATION SEE SHEET NO. 11

FOR CONTINUATION SEE SHEET NO. 15

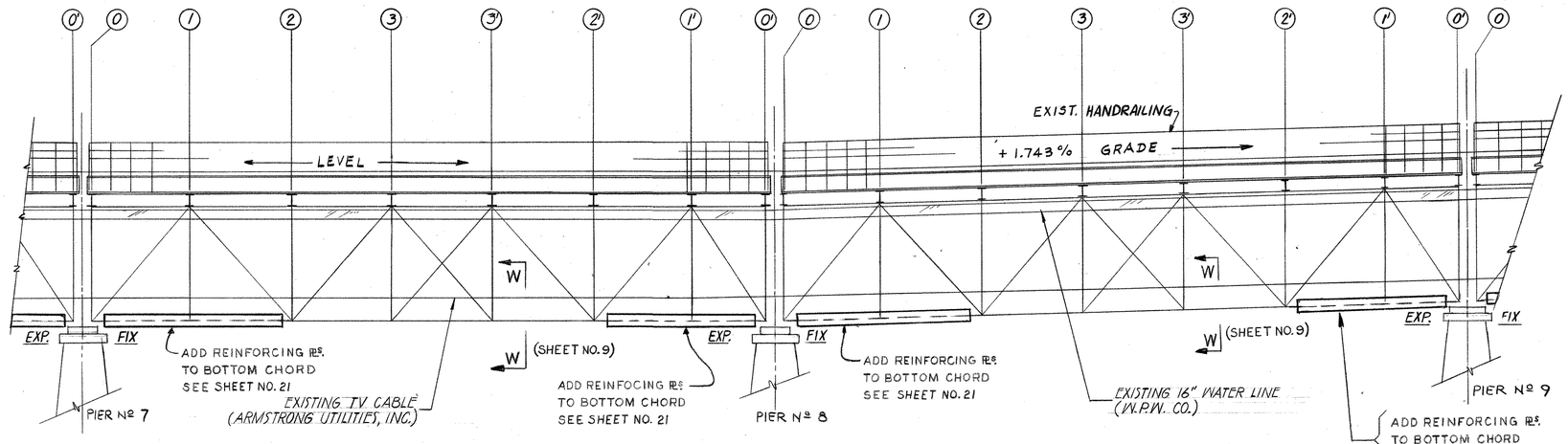

ELEVATION SOUTH TRUSS

LOOKING UPSTREAM

Mark	Description	By	Chk'd.	App'd.	Date
	REVISIONS				

Commonwealth of Pennsylvania
DEPARTMENT OF TRANSPORTATION
BUREAU OF DESIGN

BEAVER COUNTY
L.R. 04017 SEC. 6 STA. 49 + 74

REHABILITATION OF THE KOPPEL BRIDGE

OVER THE
P. & L.E. R.R., PENN CENTRAL R.R. & BEAVER RIVER
SUPERSTRUCTURE REPAIRS, SPANS 8 & 9

APPROVED MAR 9 1976
B. J. Kotalik
BRIDGE ENGINEER

0021065

SHEET 13 OF 33

S-11862

K&E 19 1153 9-73 W2711+

7530-2350-0200

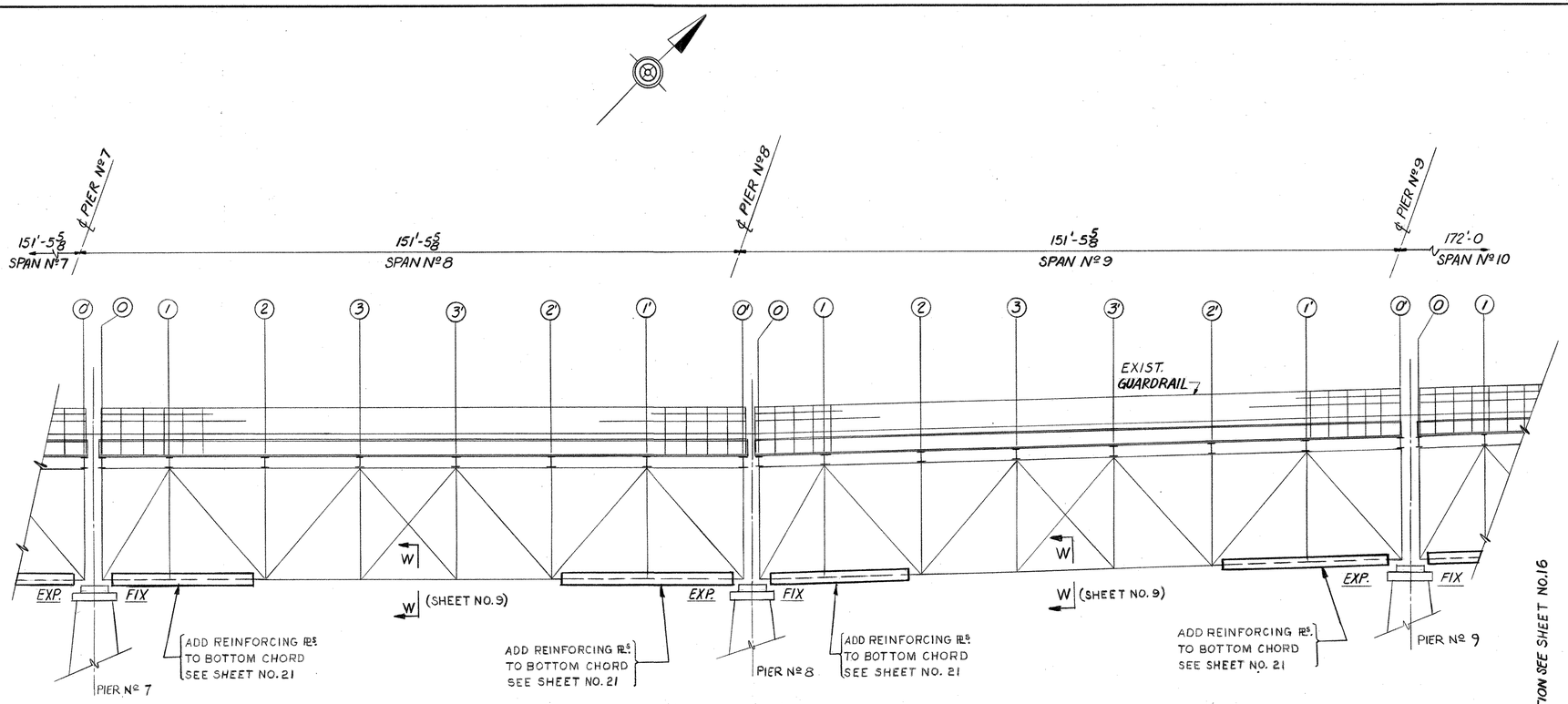

ELEVATION NORTH TRUSS

LOOKING UPSTREAM

FOR CONTINUATION SEE SHEET NO.12

FOR CONTINUATION SEE SHEET NO.16

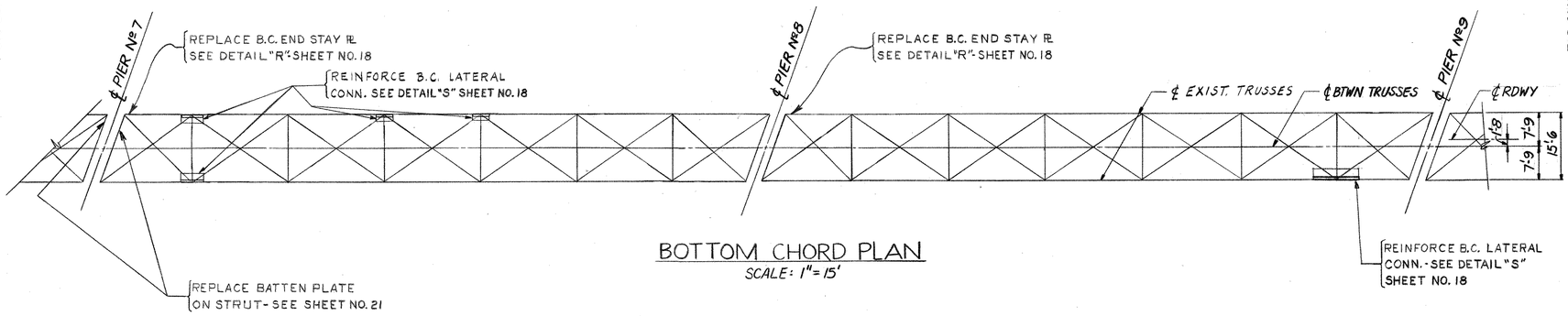

BOTTOM CHORD PLAN

SCALE: 1" = 15'

Mark	Description	By	Chk'd.	App'd.	Date
REVISIONS					

Commonwealth of Pennsylvania

DEPARTMENT OF TRANSPORTATION

BUREAU OF DESIGN

BEAVER COUNTY

L.R. 04017 SEC. 6 STA. 49 + 74

REHABILITATION OF THE KOPPEL BRIDGE

OVER THE

P. & L.E. R.R., PENN CENTRAL R.R. & BEAVER RIVER

SUPERSTRUCTURE REPAIRS, SPANS 8 & 9

APPROVED MAR 9 1976

B J Kotalik

BRIDGE ENGINEER

0021066

SHEET 14 OF 33

S-11862

KOE 19 1153 9-73 W2711•

7530-2350-0200

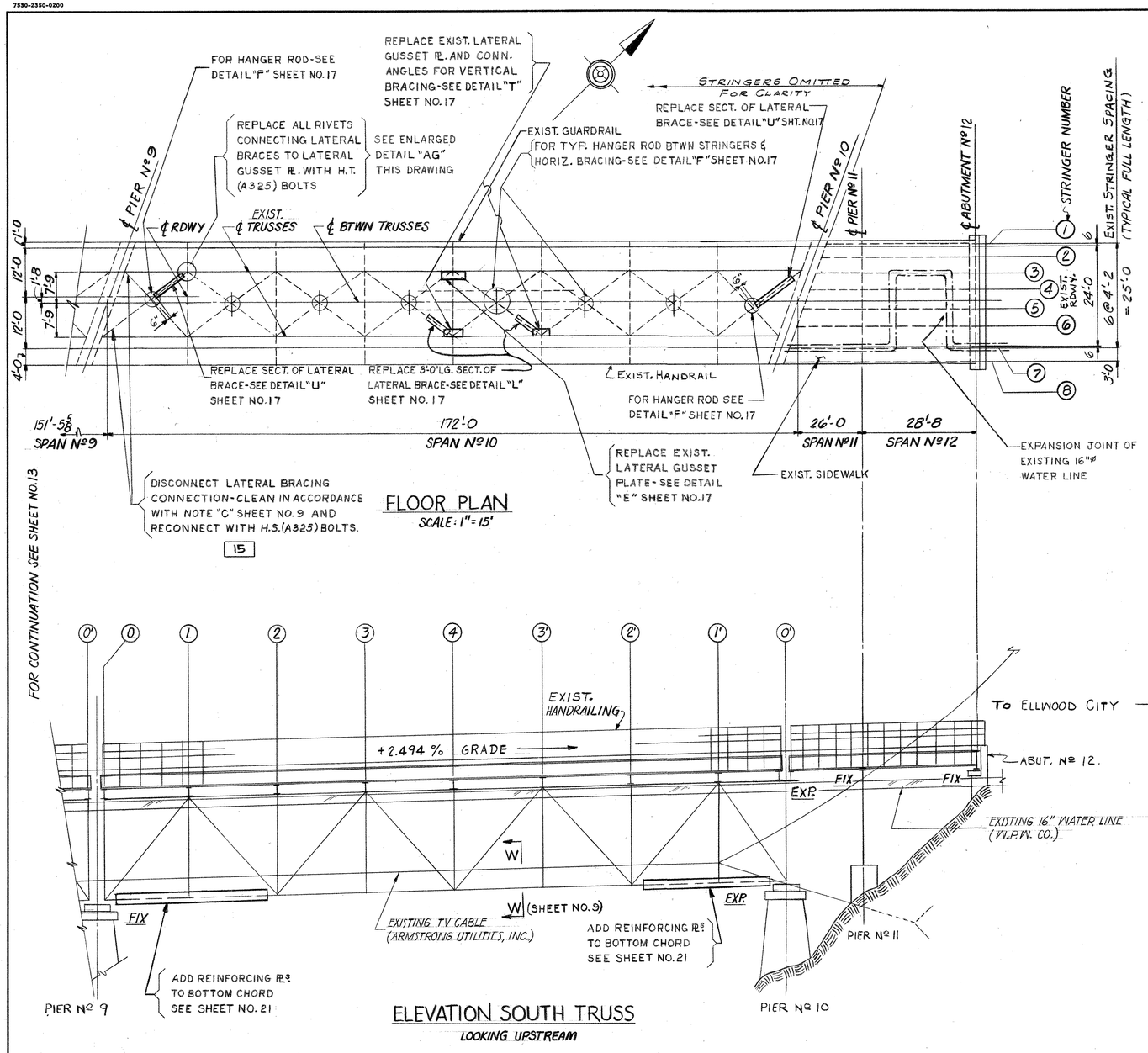

FLOOR PLAN
SCALE: 1" = 15'

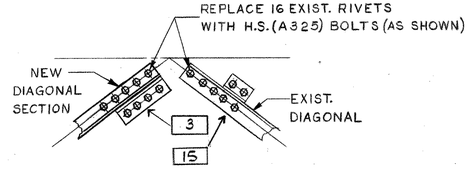

ENLARGED DETAIL "AG"

ELEVATION SOUTH TRUSS
LOOKING UPSTREAM

Mark	Description	By	Chk'd.	App'd.	Date
REVISIONS					

Commonwealth of Pennsylvania
DEPARTMENT OF TRANSPORTATION
BUREAU OF DESIGN

BEAVER COUNTY
L.R. 04017 SEC. 6 STA. 49 + 74

REHABILITATION OF THE KOPPEL BRIDGE

OVER THE
P. & L.E. R.R., PENN CENTRAL R.R. & BEAVER RIVER
SUPERSTRUCTURE REPAIRS, SPANS 10, 11 & 12

APPROVED MAR 9 1976
0021067
BRIDGE ENGINEER

SHEET 15 OF 33

S-11862

K&E 19 1153 9-73 W2711•

7530-2350-0200

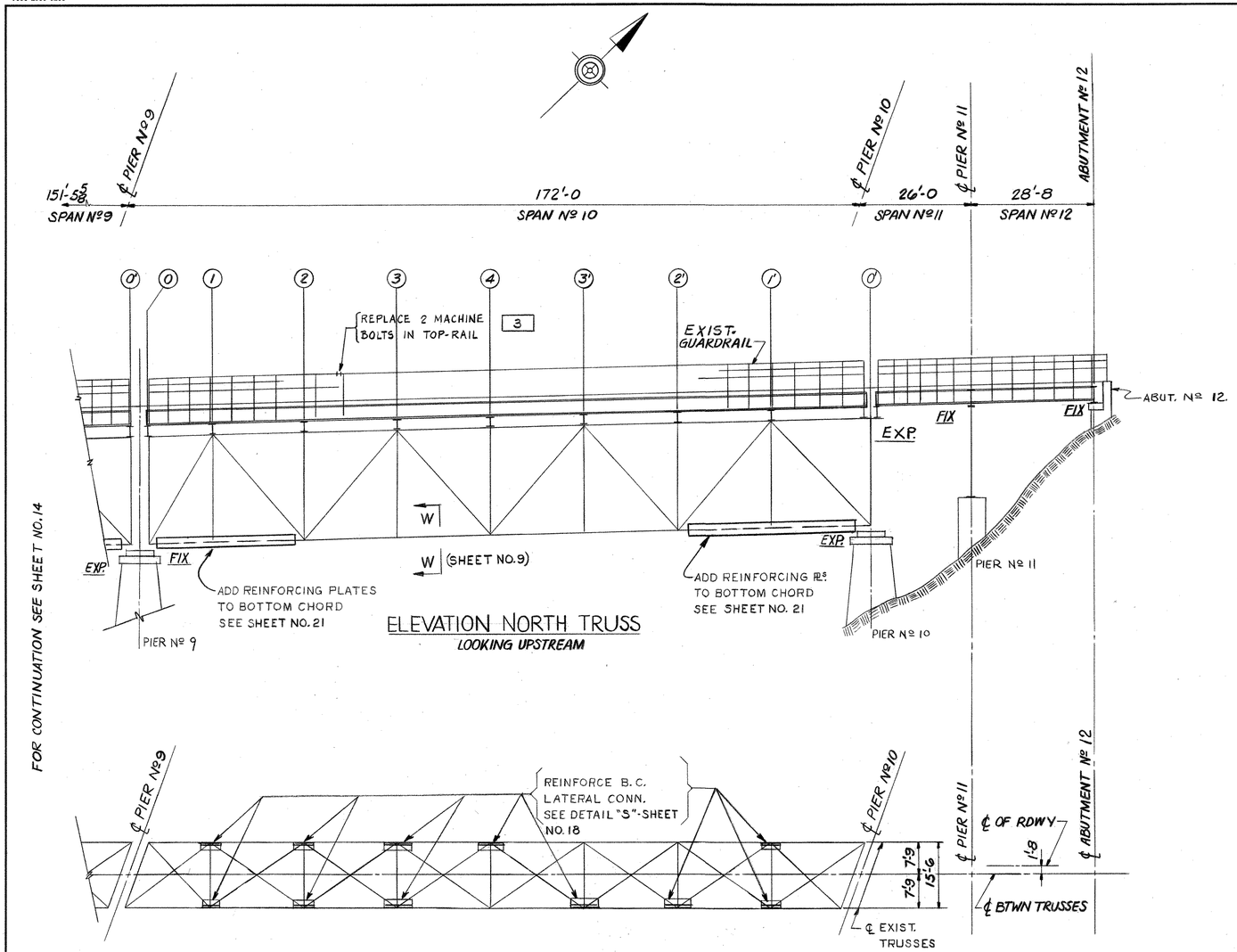

ELEVATION NORTH TRUSS
LOOKING UPSTREAM

BOTTOM CHORD PLAN
SCALE: 1" = 15'

NOTE
FOR GUARDRAIL MACHINE BOLT LOCATIONS SEE SHEET 10.

Mark	Description	By	Chk'd.	App'd.	Date
REVISIONS					

Commonwealth of Pennsylvania
DEPARTMENT OF TRANSPORTATION
BUREAU OF DESIGN

BEAVER COUNTY
L.R. 04017 SEC. 6 STA. 49 + 74

REHABILITATION OF THE KOPPEL BRIDGE

OVER THE
P & L.E. R.R., PENN CENTRAL R.R. & BEAVER RIVER

SUPERSTRUCTURE REPAIRS, SPANS 10, 11 & 12

APPROVED MAR 9 1976
B Z Kotalik
BRIDGE ENGINEER
0021068

SHEET 16 OF 33

S-11862

K&E 19 1153 9-73 W2711•

7530-2350-0200

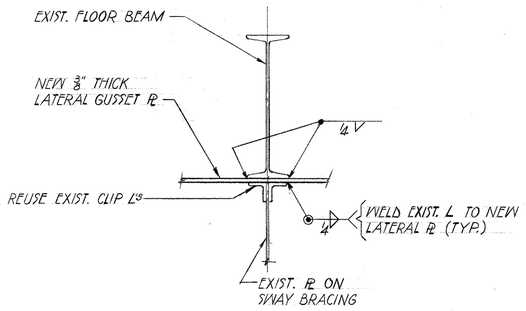

SECTION ~ AA-AA

FOR DETAIL "E"

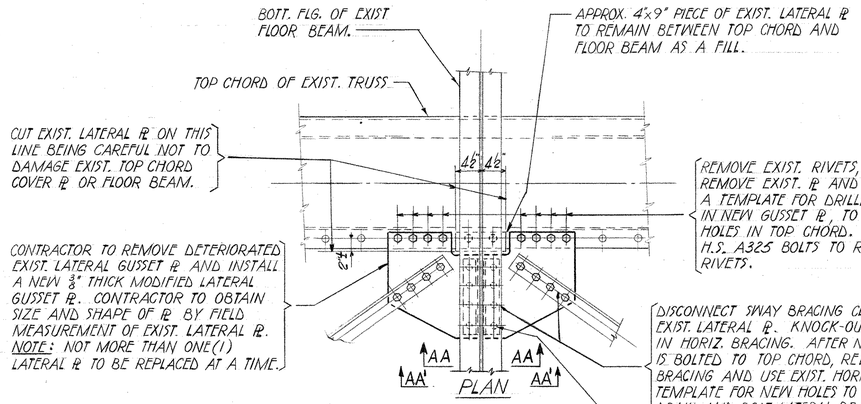

TOP CHORD LATERAL BRACING PL REPLACEMENT [3]

DETAIL "E" AS NOTED

DETAIL "T" AS NOTED

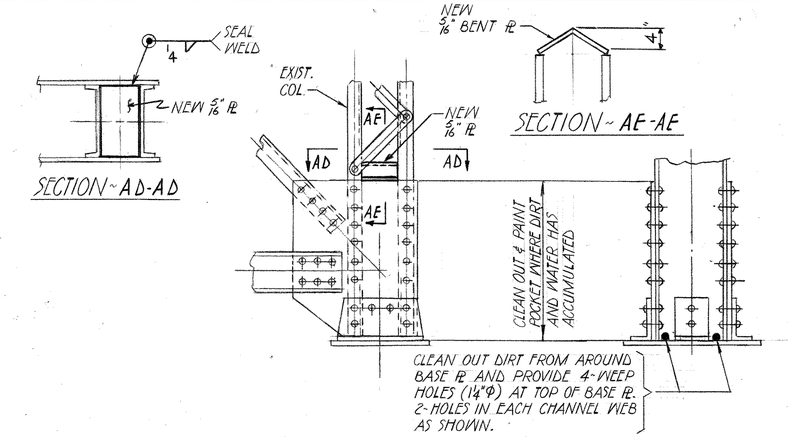

DETAIL "J" [3]

COLUMN BENTS ~ PIERS ~ 2 & 3 & EAST END OF SPAN ~ 4

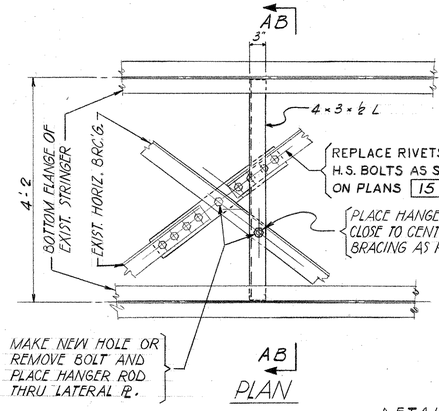

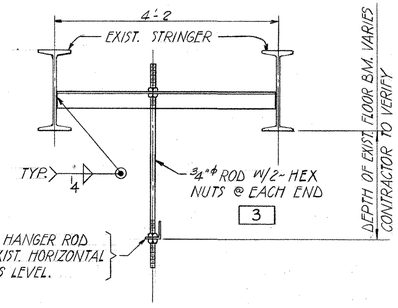

DETAIL "F" [3]

TYPICAL FOR ALL TOP CHORD BRACING

SCALE: 3/4" = 1'-0

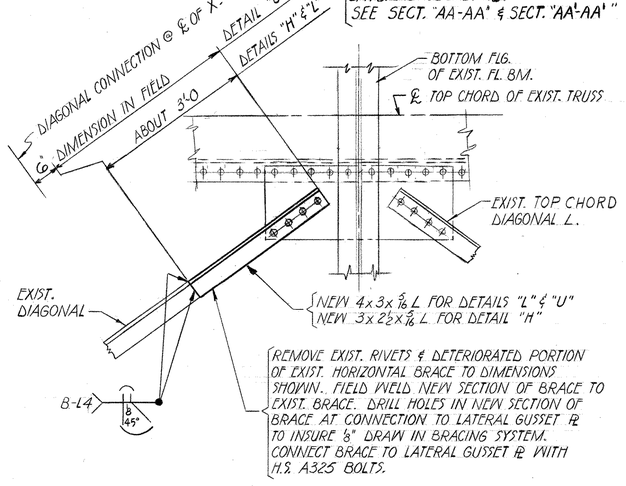

TOP CHORD LATERALS

DETAIL "H" (AS NOTED) AT SPAN ~ 4 ONLY

DETAIL "L" (AS NOTED) AT SPAN ~ 5 & SPAN ~ 10

DETAIL "U" (AS NOTED) AT SPAN ~ 10 ONLY

[3]

SCALE: 3/4" = 1'-0

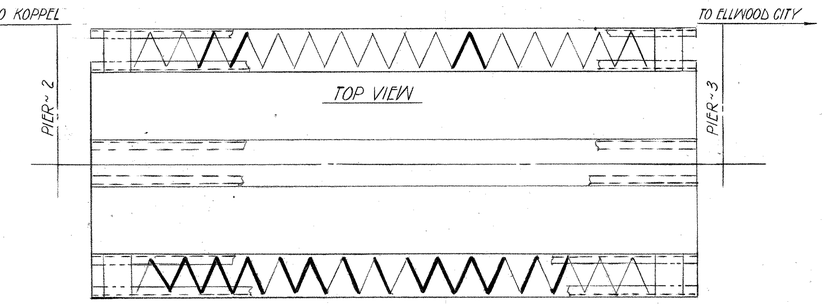

NOTE: (——) HEAVY LINE INDICATES LACING BARS TO BE REPLACED. FOR PROCEDURE, SEE DETAIL "V" THIS DRAWING.

DETAIL "K" [3]

LACING BAR REPLACEMENT - TOP STRUT SOUTH BENT SPAN ~ 3

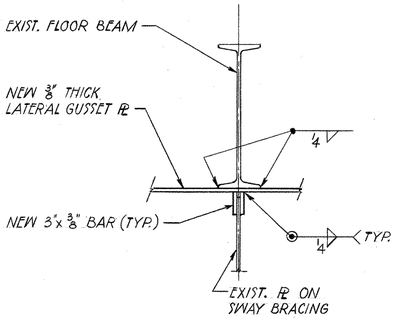

FOR DETAIL "T"

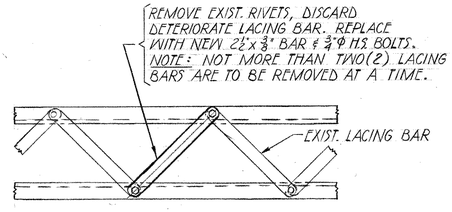

DETAIL "V" [3]

TYPICAL LACING BAR REPLACMENT

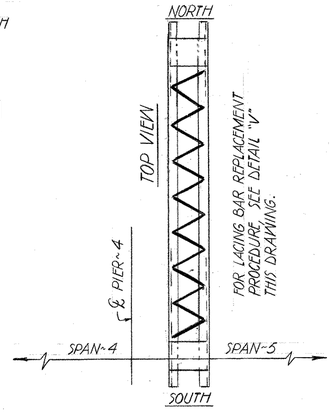

DETAIL "O" [3]

LACING BAR REPLACEMENT FOR TOP STRUT OF BENT AT PIER ~ 4.

Mark	Description	By	Chk'd.	App'd.	Date
REVISIONS					

Commonwealth of Pennsylvania
DEPARTMENT OF TRANSPORTATION
BUREAU OF DESIGN

BEAVER COUNTY
L.R. 04017 SEC. 6 STA. 49 + 74

REHABILITATION OF THE KOPPEL BRIDGE

OVER THE
P. & L.E. R.R., PENN CENTRAL R.R. & BEAVER RIVER
SUPERSTRUCTURE REPAIR DETAILS

APPROVED MAR 9 1976
B J Kotalik
BRIDGE ENGINEER
0021069

SHEET 17 OF 33

S-11862

K&E 19 1153 9-73 W2711•

7530-2350-0200

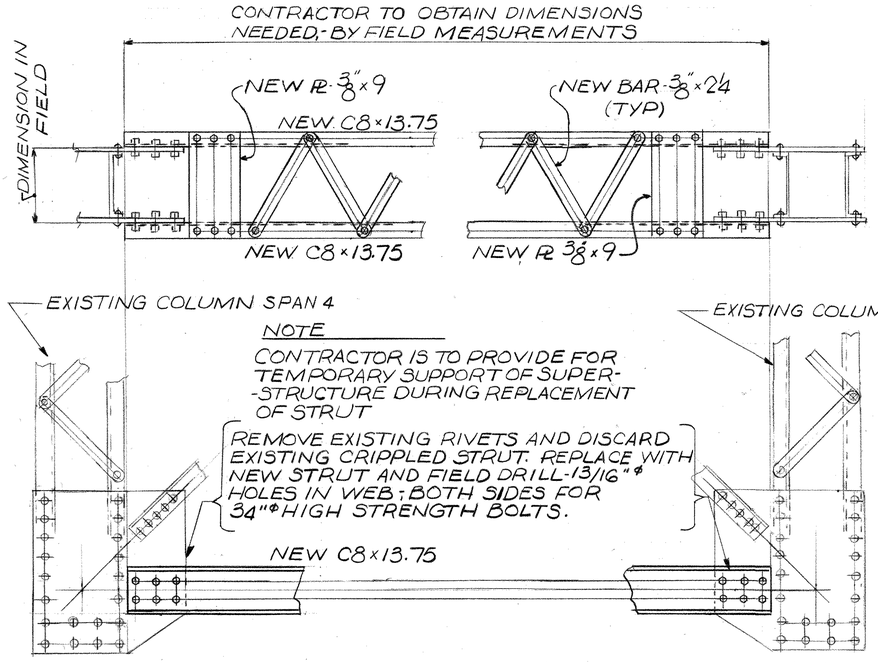

NEW STRUT DETAIL "N"
(PIER NO.4-SPAN 4)
3

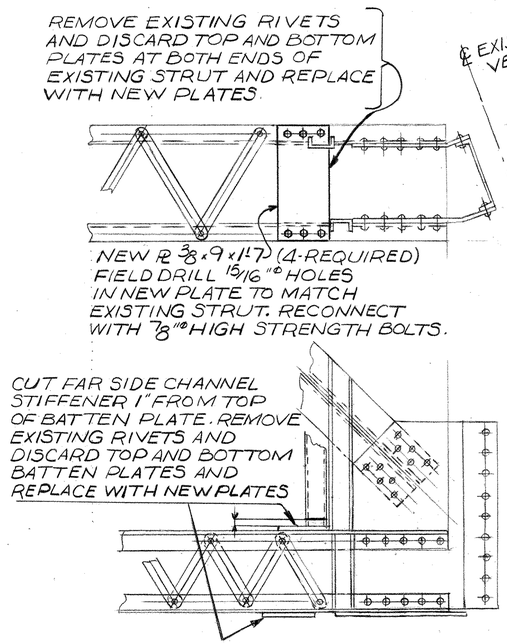

DETAIL "P"
(BOTH ENDS SIMILAR)
3

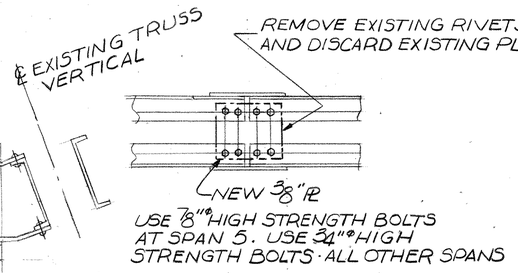

NEW STAY PLATE DETAIL "R"
3

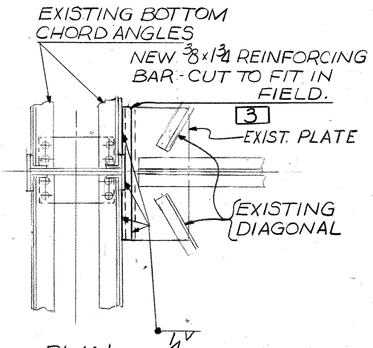

PLAN

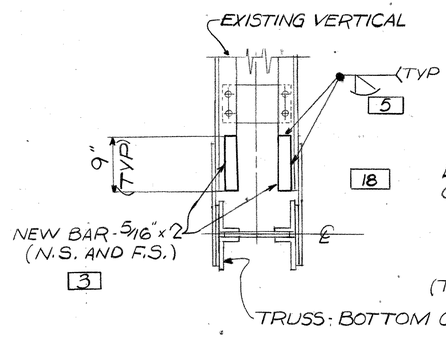

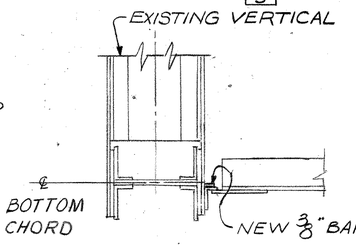

DETAIL "S"
(TYPICAL LATERAL PLATE REINFORCEMENT)

DETAIL "Q"
(TYPICAL VERTICAL REINFORCEMENT)

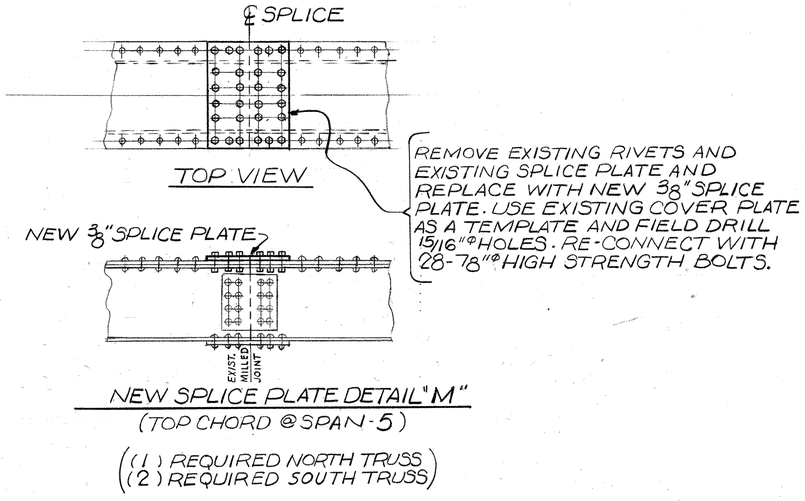

NEW SPLICE PLATE DETAIL "M"
(TOP CHORD @ SPAN-5)
((1) REQUIRED NORTH TRUSS)
((2) REQUIRED SOUTH TRUSS)
3

Mark	Description	By	Chk'd.	App'd.	Date
REVISIONS					

Commonwealth of Pennsylvania
DEPARTMENT OF TRANSPORTATION
BUREAU OF DESIGN

BEAVER COUNTY
L.R. 04017 SEC. 6 STA. 49 + 74

REHABILITATION OF THE KOPPEL BRIDGE

OVER THE
P. & L.E. R.R., PENN CENTRAL R.R. & BEAVER RIVER
SUPERSTRUCTURE REPAIR DETAILS

APPROVED MAR 9 1976
B J Kotalik
BRIDGE ENGINEER
0021070

SHEET 18 OF 33

S-11862

KaE 19 1153 9-72 W2711+

7530-2350-0200

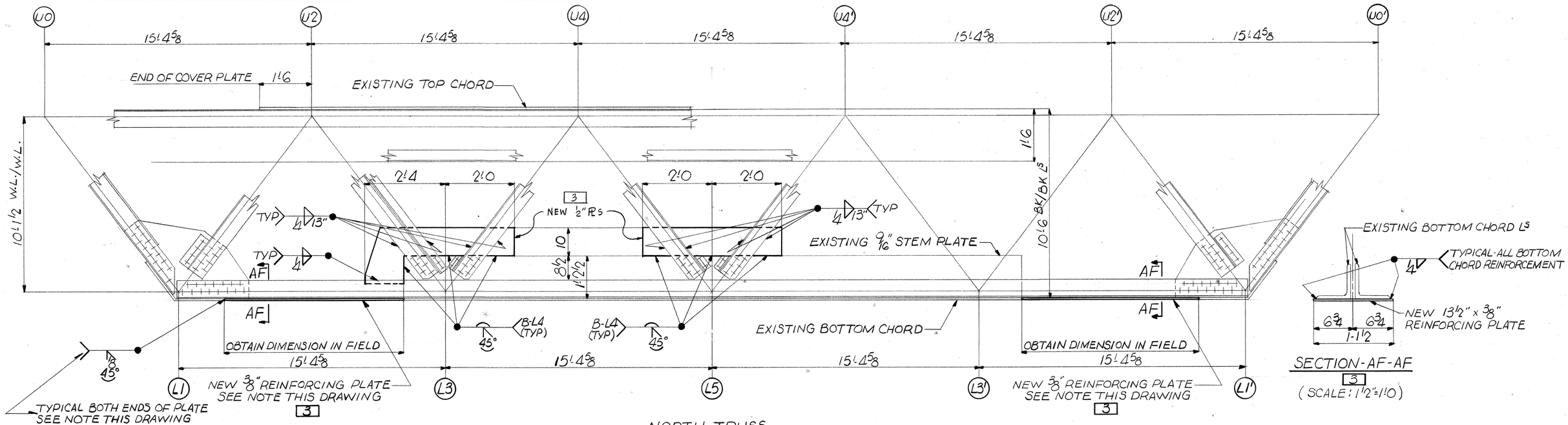

SECTION-AF-AF
3
(SCALE: 1 1/2"=1'0)

NORTH TRUSS
TRUSS REINFORCEMENT
SPAN 4

NOTE:
SCALE ON TRUSSES
OVERALL DIMENSIONS: 3/8" = 1'0
DETAIL DIMENSIONS: 3/4" = 1'0

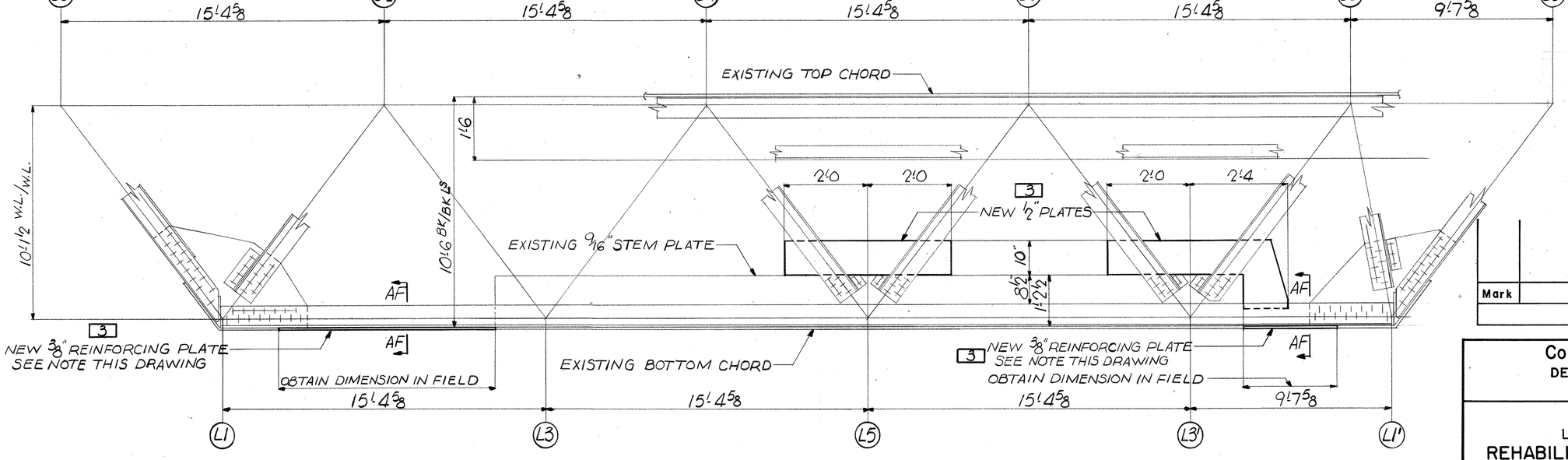

SOUTH TRUSS
TRUSS REINFORCEMENT
SPAN 4

NOTE
ALL NEW 3/8" BOTTOM CHORD REINFORCING PLATES TO BE CUT TO FIT IN FIELD. BOTH ENDS OF ALL PLATES TO BE PREPARED FOR WELDING.

Mark	Description	By	Chk'd.	App'd.	Date
REVISIONS					

Commonwealth of Pennsylvania
DEPARTMENT OF TRANSPORTATION
BUREAU OF DESIGN

BEAVER COUNTY
L.R. 04017 SEC. 6 STA. 49 + 74

REHABILITATION OF THE KOPPEL BRIDGE

OVER THE
P. & L.E. R.R., PENN CENTRAL R.R. & BEAVER RIVER
TRUSS REINFORCEMENT SPAN 4

APPROVED MAR 9 1976
BZKatalil 0021071
BRIDGE ENGINEER

SHEET 19 OF 33

S-11862

K&E 19 1153 9-73 W2711+

7530-2350-0200

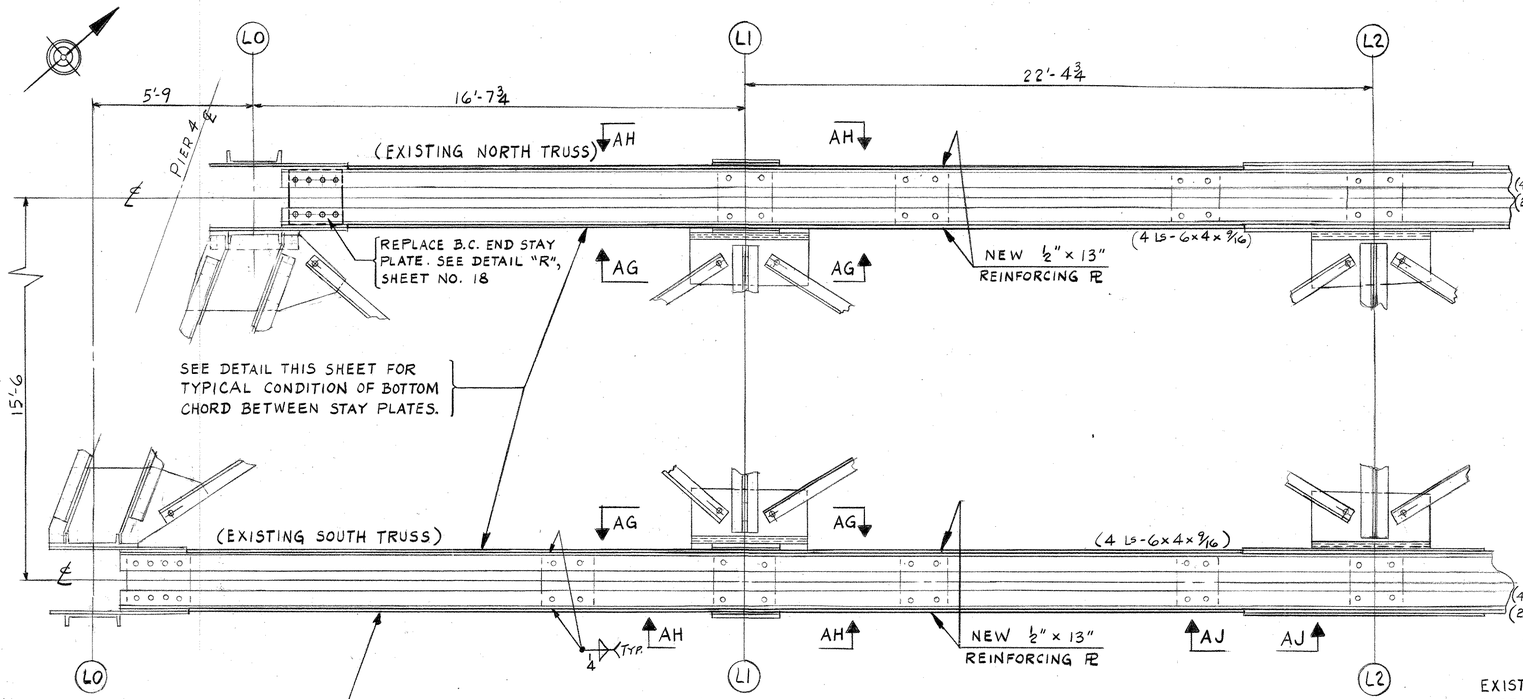

NOTE - ALL NEW REINFORCING PLATES ARE TO BE CUT AND FITTED IN FIELD. CLEAN EXISTING BOTTOM CHORD MEMBERS BEFORE INSTALLING NEW REINFORCING PLATES. (SEE DETAIL "W", SHEET NO. 21)

PLAN - BOTTOM CHORD OF TRUSS - SPAN 5

CONTRACTOR TO PROVIDE TEMPORARY SUPPORT FOR BOTTOM CHORD & SWAY BRACING AS REQUIRED.

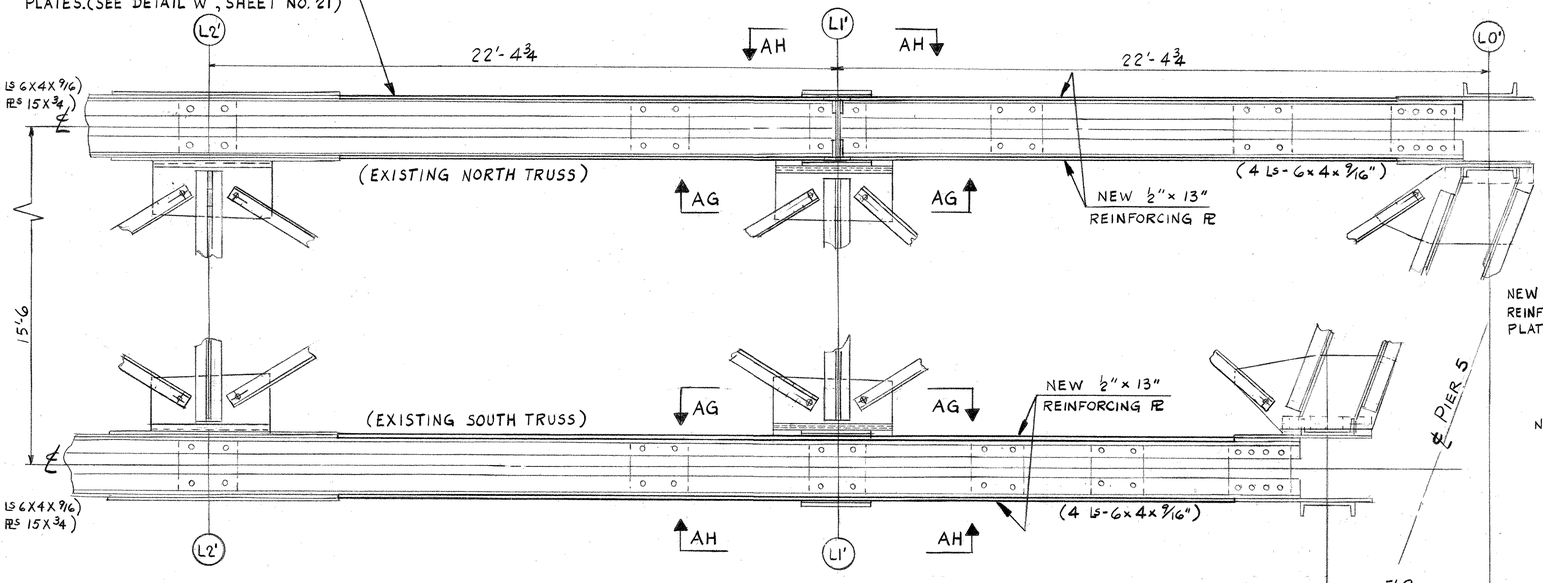

PLAN - BOTTOM CHORD OF TRUSS - SPAN 5

CONTRACTOR TO PROVIDE TEMPORARY SUPPORT FOR BOTTOM CHORD & SWAY BRACING AS REQUIRED.

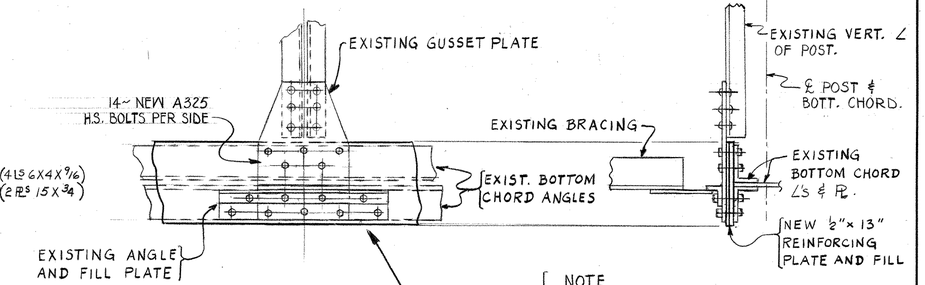

VIEW AG-AG

SCALE: 1"= 1'-0

NOTE

REMOVE EXISTING RIVETS AND FILL PLATE. PLACE NEW ½"x 13" PLATE BETWEEN EXISTING GUSSET PLATE AND BOTTOM CHORD ANGLES. USE FILLS AS NECESSARY TO MAKE UP ANY GAP BETWEEN NEW PLATE AND EXISTING PLATE. USE EXISTING PLATE AS A TEMPLATE AND DRILL 15/16" ϕ HOLES THRU NEW PLATE AND FILLS. INSTALL NEW ⅞" ϕ A325 BOLTS.

NOTE

MAKE THIS WELD AT BOTH ENDS OF NEW REINFORCING PLATE BEFORE MAKING LONGITUDINAL WELD.

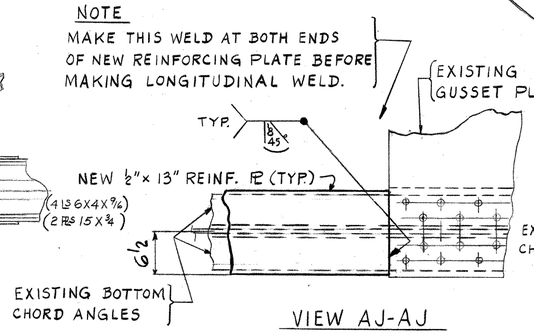

VIEW AJ-AJ

(TYPICAL WELD AT EXISTING GUSSET PL)

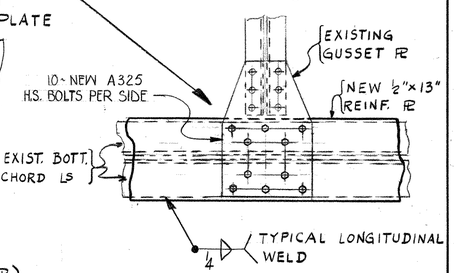

VIEW AH-AH

SCALE: 1"= 1'-0

CONTRACTOR NOTE

CONTINUOUS CONTACT OF NEW PLATE TO EXISTING BOTTOM CHORD ANGLES IS ESSENTIAL. NEW PLATE IS TO BE CLAMPED TO EXISTING ANGLES AS NECESSARY BEFORE WELDING IS PERFORMED.

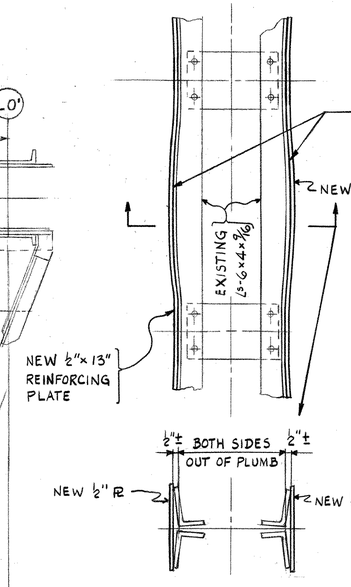

TYPICAL CONDITION BETWEEN STAY PLs - BOTTOM CHORD - SPAN 5

SOUTH TRUSS { L_0 TO L_1, L_1 TO L_2 ; L_2' TO L_1', L_1' TO L_0'

NORTH TRUSS - L_0 TO L_1, L_1 TO L_2

NOTE - ALL WORK ON THIS SHEET WILL BE PAID FOR UNDER ITEM 3.

Mark	Description	By	Chk'd.	App'd.	Date
REVISIONS					

Commonwealth of Pennsylvania
DEPARTMENT OF TRANSPORTATION
BUREAU OF DESIGN

BEAVER COUNTY
L.R. 04017 SEC. 6 STA. 49 + 74

REHABILITATION OF THE KOPPEL BRIDGE

OVER THE
P. & L.E. R.R., PENN CENTRAL R.R. & BEAVER RIVER
BOTTOM CHORD REINFORCEMENT SPAN 5

APPROVED MAR 9 1976
B Z Kotalik
BRIDGE ENGINEER
0021072

SHEET 20 OF 33

S-11862

K&E 19 1153 9-73 W2711+

7530-2350-0200

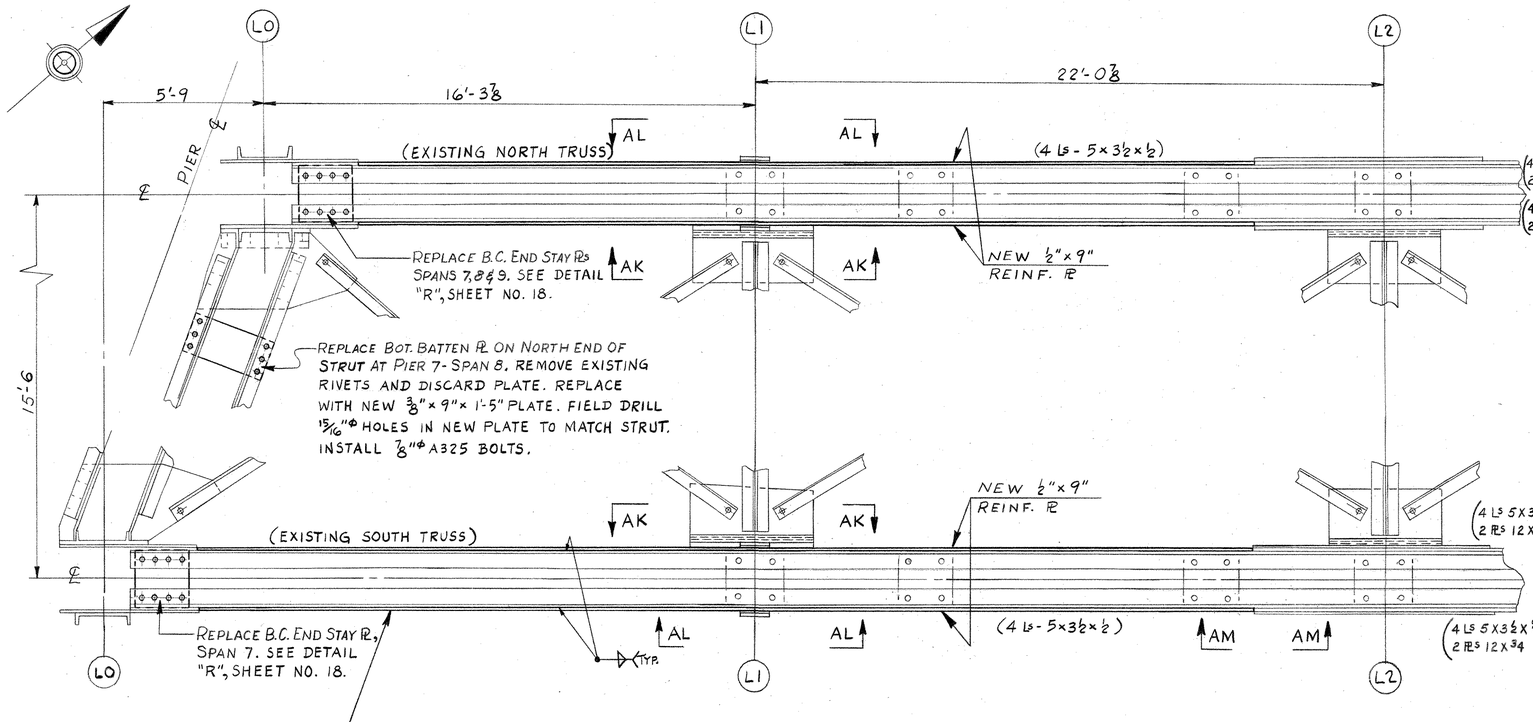

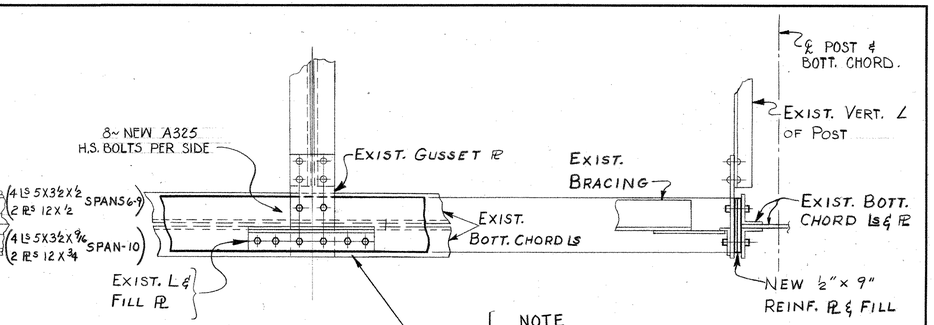

VIEW AK-AK

SCALE: 1" = 1'-0

NOTE

REMOVE EXISTING RIVETS AND FILL PLATE. PLACE NEW ½"x9" PLATE BETWEEN EXISTING GUSSET PLATE AND BOTTOM CHORD ANGLES. USE FILLS AS NECESSARY TO MAKE UP ANY GAP BETWEEN NEW PLATE AND EXISTING PLATE. USING EXISTING PLATE AS A TEMPLATE DRILL 15/16"Φ HOLES THRU NEW PLATE AND FILL. INSTALL ⅞"Φ A325 BOLTS.

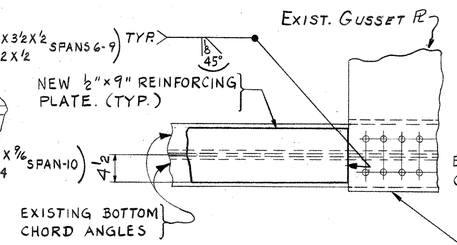

VIEW AM-AM

(TYP. WELD AT EXIST. GUSSET PL)

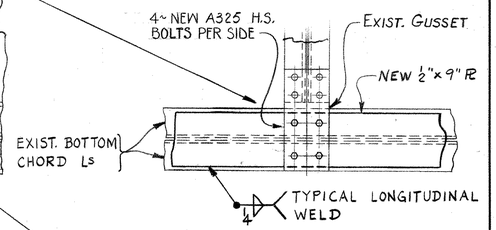

VIEW AL-AL

SCALE: 1" = 1'-0

NOTE

MAKE THIS WELD AT BOTH ENDS OF NEW REINFORCING PLATE BEFORE MAKING LONGITUDINAL WELD.

NOTE - ALL NEW REINFORCING PLATES ARE TO BE CUT AND FITTED IN FIELD. CLEAN EXISTING BOTTOM CHORD MEMBERS BEFORE INSTALLING REINFORCING PLATES. SEE DETAIL "W".

PLAN - BOTTOM CHORD OF TRUSSES - SPANS 6, 7, 8, 9 & 10

CONTRACTOR TO PROVIDE TEMPORARY SUPPORT FOR BOTTOM CHORD & SWAY BRACING AS REQUIRED.

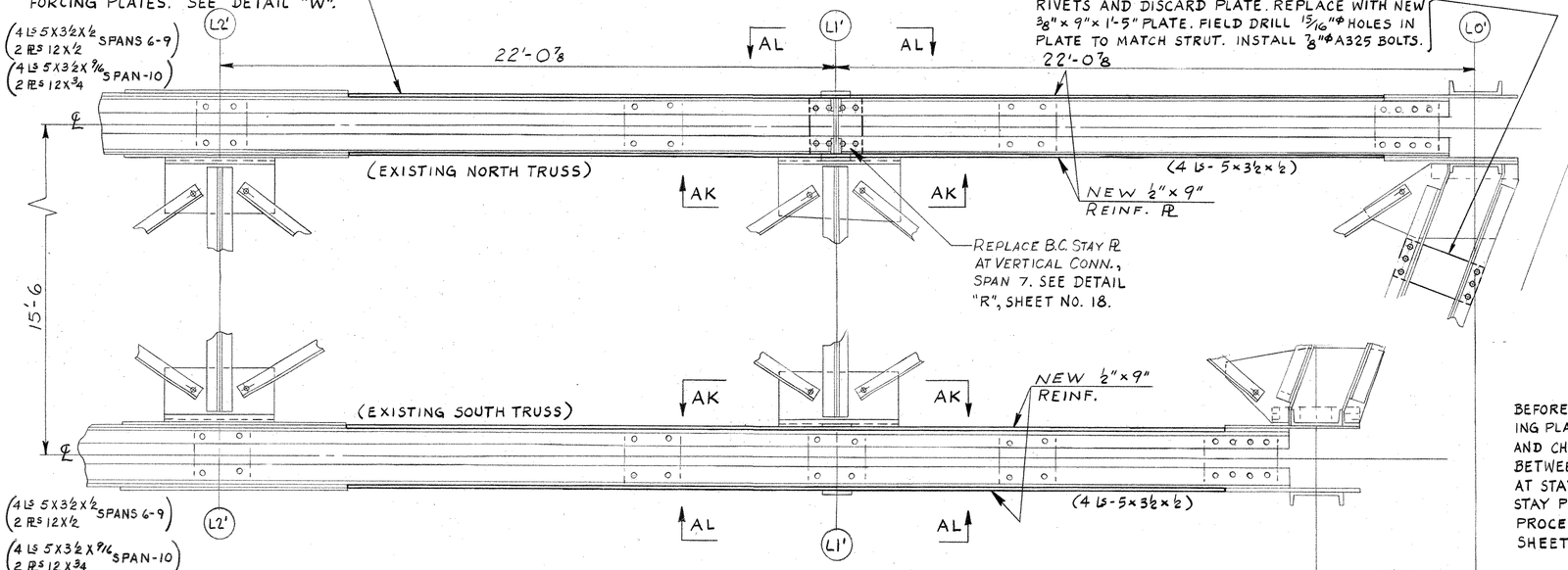

PLAN - BOTTOM CHORD OF TRUSSES - SPANS 6, 7, 8, 9 & 10

CONTRACTOR TO PROVIDE TEMPORARY SUPPORT OF BOTTOM CHORD & SWAY BRACING AS REQUIRED.

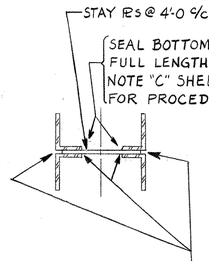

BEFORE WELDING NEW REINFORCING PLATE IN PLACE, BLAST CLEAN AND CHIP CORROSION FROM BETWEEN BOTTOM CHORD MEMBERS AT STAY PLATES AND BETWEEN STAY PLATES. FOR CLEANING PROCEDURE SEE NOTE "C" ON SHEET NO. 9.

DETAIL "W"

NOTE - ALL WORK ON THIS SHEET WILL BE PAID FOR UNDER ITEM 3.

Mark	Description	By	Chk'd.	App'd.	Date
	REVISIONS				

Commonwealth of Pennsylvania
DEPARTMENT OF TRANSPORTATION
BUREAU OF DESIGN

BEAVER COUNTY
L.R. 04017 SEC. 6 STA. 49 + 74

REHABILITATION OF THE KOPPEL BRIDGE

OVER THE
P. & L.E. R.R., PENN CENTRAL R.R. & BEAVER RIVER
BOTTOM CHORD REINFORCEMENT SPANS 6, 7, 8, 9 & 10

APPROVED MAR 9 1976
B.Z. Kotalik
BRIDGE ENGINEER

0021073

SHEET 21 OF 33

S-11862

K&E 19 1153 9-73 W2711•

7530-2350-0200

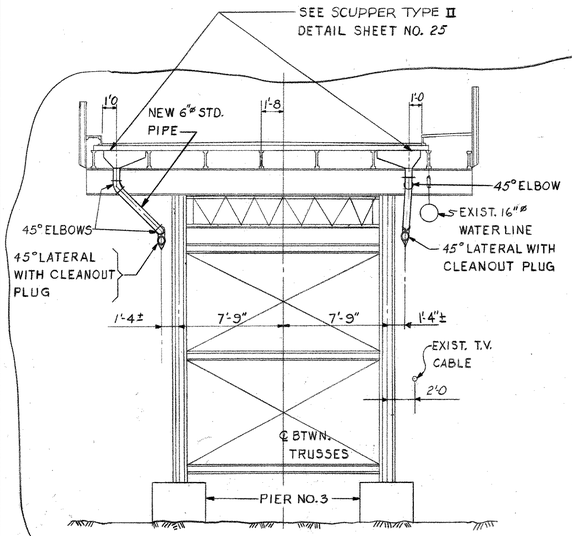

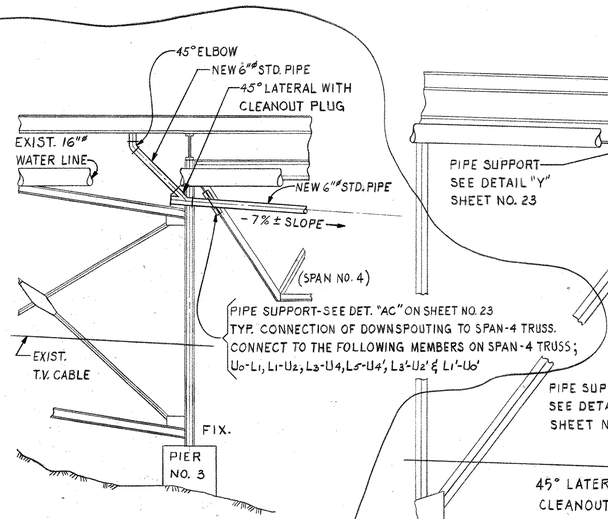

ELEVATION-(LOOKING WEST)

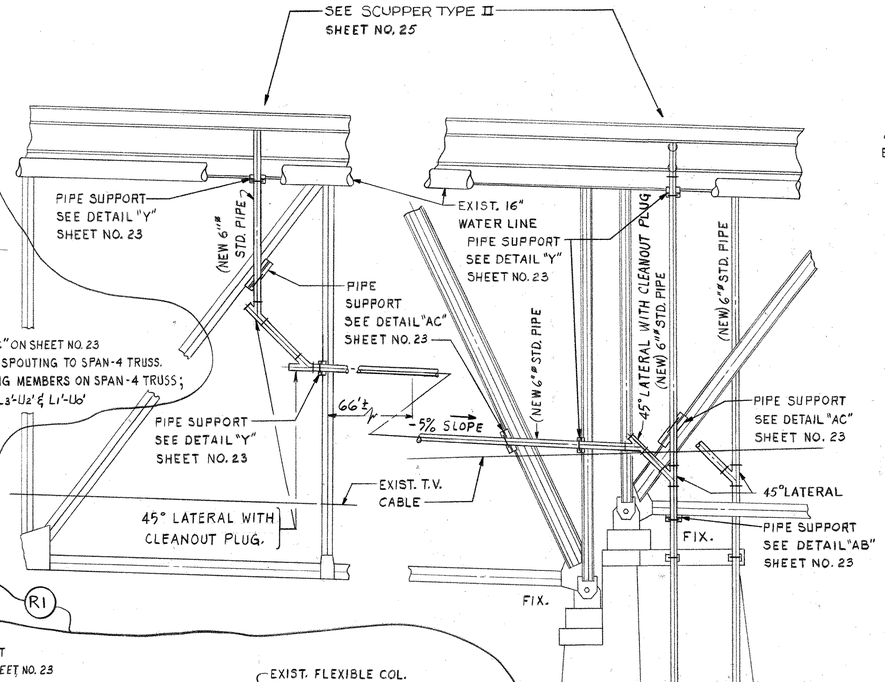

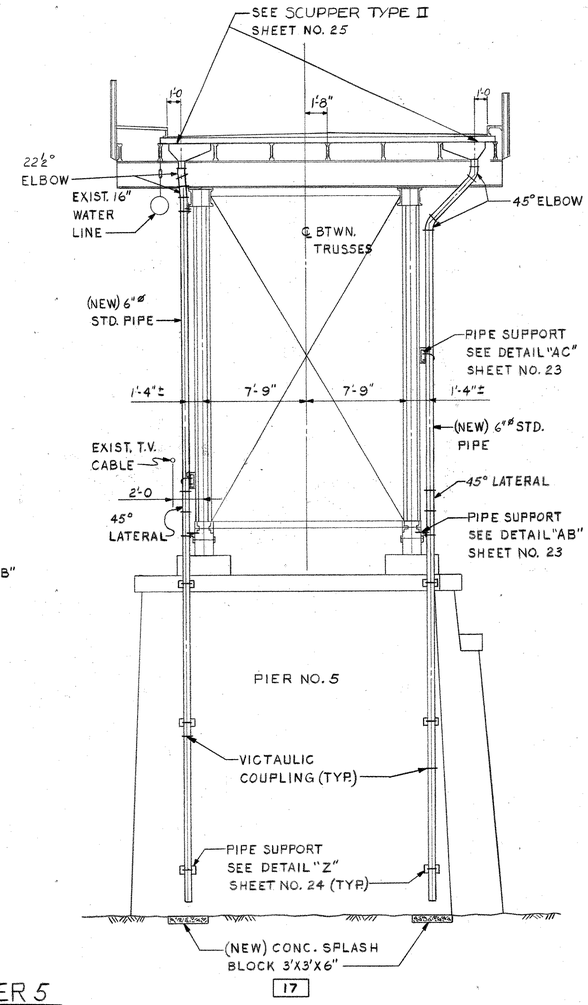

DRAINAGE AT SPAN 5 AND PIER 5

SCALE 3/16"=1'-0"

DRAINAGE AT PIER 3

SCALE 3/16"=1'-0"

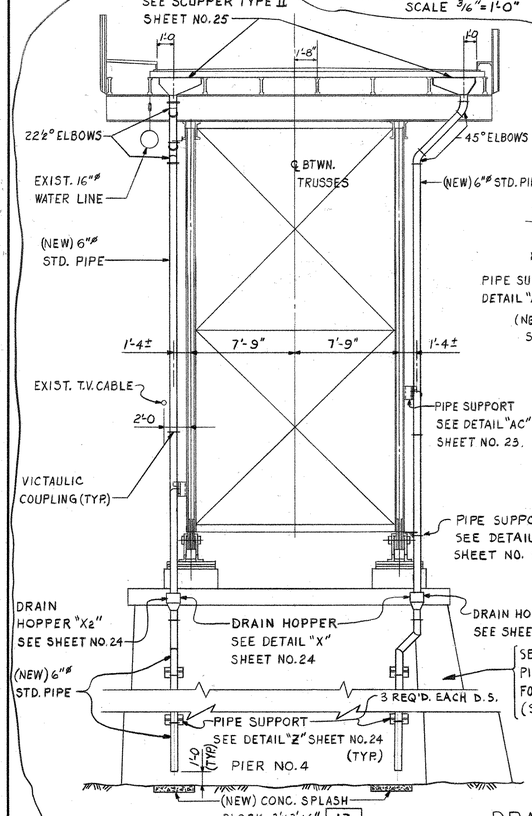

SECTION "CB-CB"

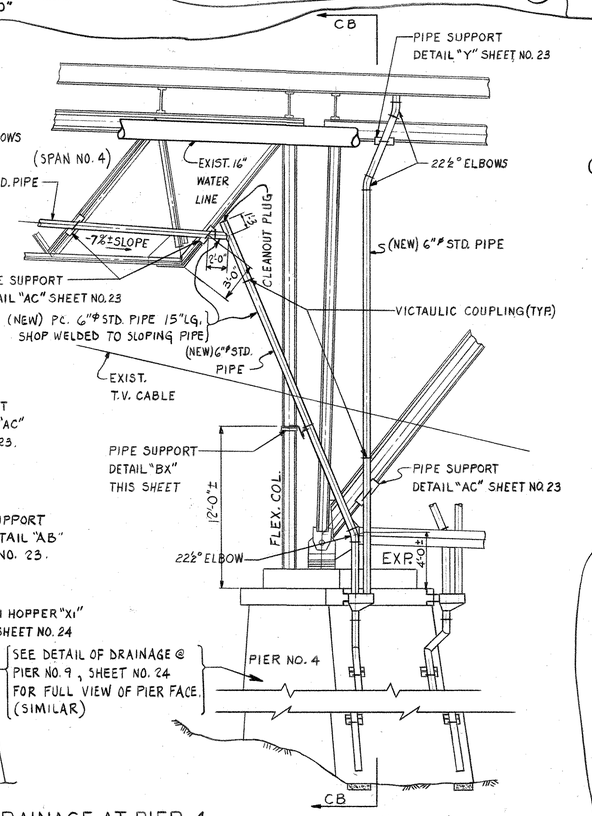

DRAINAGE AT PIER 4

SCALE 3/16"=1'-0

ELEVATION-LOOKING UPSTREAM

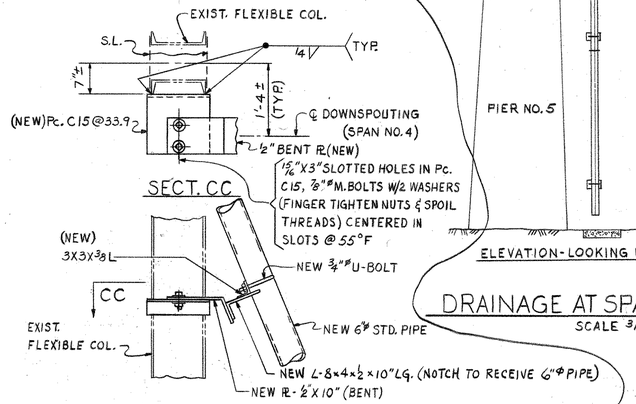

DETAIL "BX"

SCALE ¾"=1'-0"

NOTES

a. ALL DOWNSPOUTING SHALL BE 6" ø SCHEDULE 40 A.S.T.M. A53 PLAIN STEEL PIPE, GALVANIZED AFTER FABRICATION. COUPLINGS SHALL ALSO BE GALVANIZED.
b. ALL MATERIAL FOR SCUPPERS AND HOPPERS SHALL BE A.S.T.M. A36 STEEL - GALVANIZED AFTER FABRICATION IN ACCORDANCE WITH AASHTO M111 (ASTM A123)
c. ALL MATERIAL FOR PIPE SUPPORTS SHALL BE A.S.T.M. A36 STEEL, GALVANIZED AFTER FABRICATION IN ACCORDANCE WITH AASHTO M111 (ASTM A123)
d. ALL DRAINAGE ITEMS ARE TO BE FURNISHED AND INSTALLED IN ACCORDANCE WITH SPECIFICATIONS FORM 409 DATED 1973, SECTION 1050.
e. ALL DOWNSPOUTING AND SUPPORTS FOR DOWNSPOUTING SHOWN ON SHEETS 22, 23, 24, & 25 WILL BE PAID FOR UNDER ITEM 4
f. SPLASH BLOCKS SHALL BE SLOPED TOWARD RAILROAD DRAINAGE SYSTEM OR THE RIVER. ANY EXCAVATION, BACKFILLING AND/OR REMOVAL AND SATISFACTORY DISPOSAL OF EXCESS MATERIAL SHALL BE CONSIDERED INCIDENTAL TO ITEM OF CLASS "B" CEMENT CONCRETE.

Mark	Description	By	Chk'd.	App'd.	Date
	REVISIONS				
R1	REVISED DRAINAGE SYSTEM AT PIER NO. 3 & 4 & SPAN NO. 4. ADDED DETAIL "BX".	R.S.	M.P.F.	N.H.U.	8-19-76

Commonwealth of Pennsylvania
DEPARTMENT OF TRANSPORTATION
BUREAU OF DESIGN

BEAVER COUNTY
L.R. 04017 SEC. 6 STA. 49 + 74

REHABILITATION OF THE KOPPEL BRIDGE

OVER THE
P. & L.E. R.R., PENN CENTRAL R.R. & BEAVER RIVER
DRAINAGE

APPROVED MAR 9 1976
B Z Kotalik
BRIDGE ENGINEER

0021074

SHEET 22 OF 33

S-11862

K&E 19 1153 9-73 W2711+

7530-2350-0200

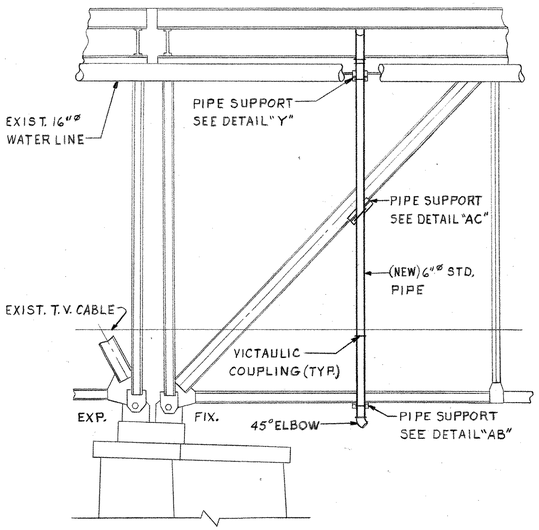

ELEVATION - (LOOKING UPSTREAM)

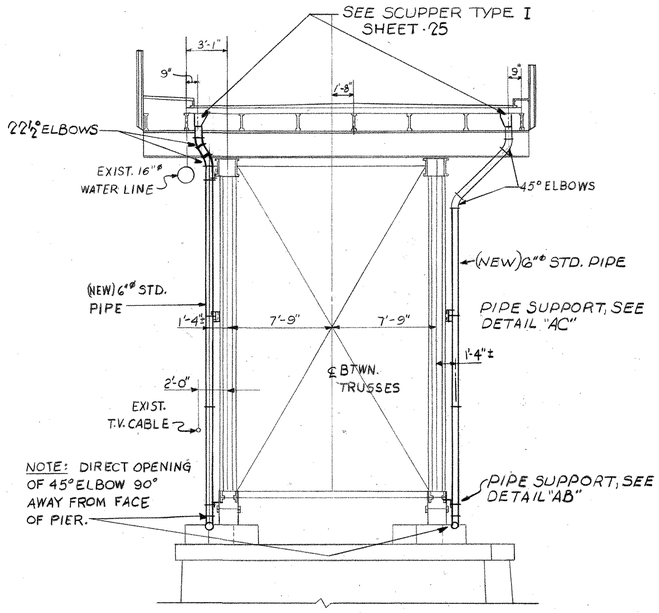

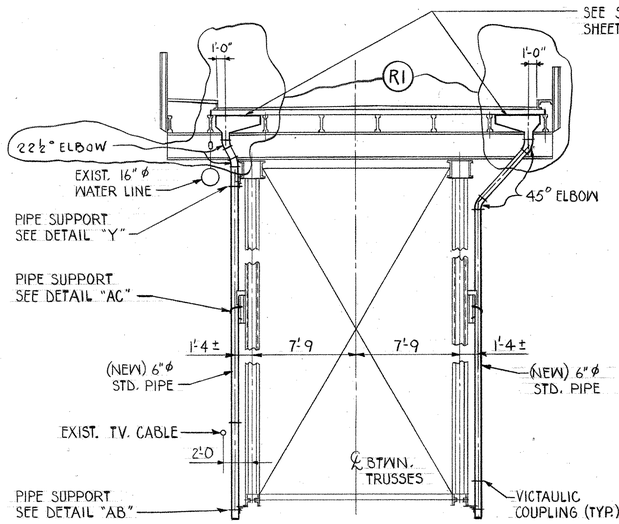

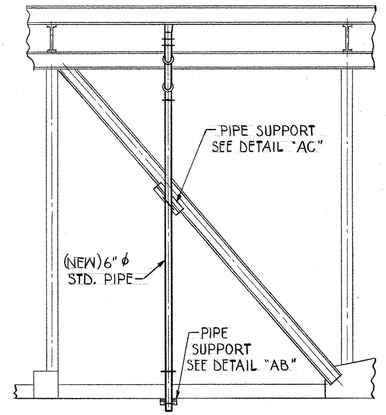

ELEVATION (LOOKING DOWNSTREAM)

TYPICAL CROSS SECTION THROUGH TYPE II
SPECIAL SCUPPERS AT SPANS 6, 7, 8 & 9.

SCALE : 3/16" = 1'-0

TYPICAL CROSS SECTION THROUGH TYPE I
SPECIAL SCUPPERS AT PIERS 7 & 8, PIER 6 SIMILAR

SCALE 3/16" = 1'-0"

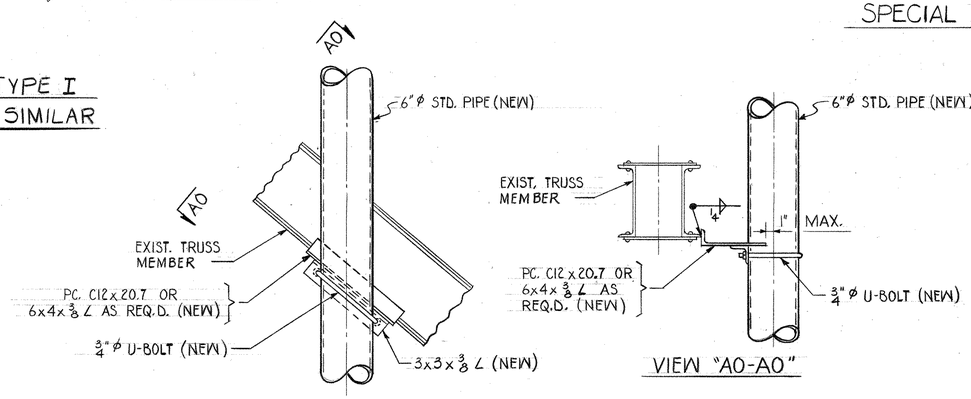

VIEW "A0-A0"

PIPE SUPPORT DETAIL "AC"

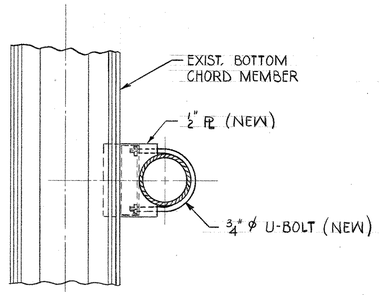

PLAN

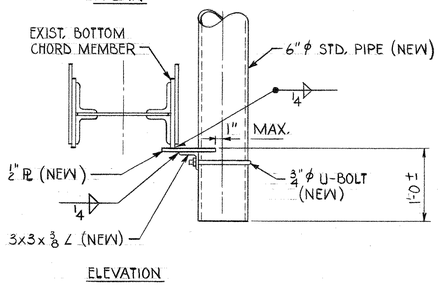

ELEVATION

PIPE SUPPORT DETAIL "AB"

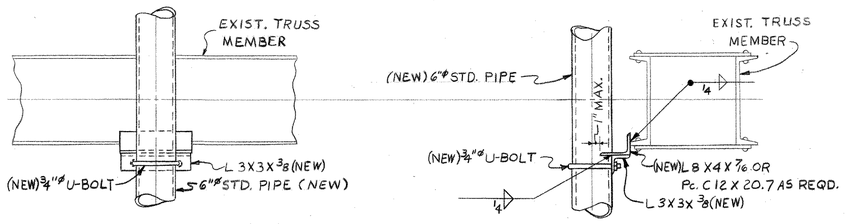

PIPE SUPPORT DETAIL "Y"

SCALE 1"=1'-0"

NOTE:
ALL DOWNSPOUTS AND SUPPORTS PAID FOR UNDER 4

Mark	Description	By	Chk'd.	App'd.	Date
R1	REV. PICT. OF SCUPPERS @ TYP. CROSS SECT. THRU SPANS 6, 7, 8 & 9	RAB	M.P.F.	N.H.U.	8-19-76

REVISIONS

Commonwealth of Pennsylvania
DEPARTMENT OF TRANSPORTATION
BUREAU OF DESIGN

BEAVER COUNTY
L.R. 04017 SEC. 6 STA. 49 + 74

REHABILITATION OF THE KOPPEL BRIDGE
OVER THE
P. & L.E. R.R., PENN CENTRAL R.R. & BEAVER RIVER
DRAINAGE

APPROVED MAR 9 1976
B J Kotabl
BRIDGE ENGINEER

0021075

SHEET 23 OF 33

S-11862

K&E 19 1153 9-73 W2711-

7530-2350-0200

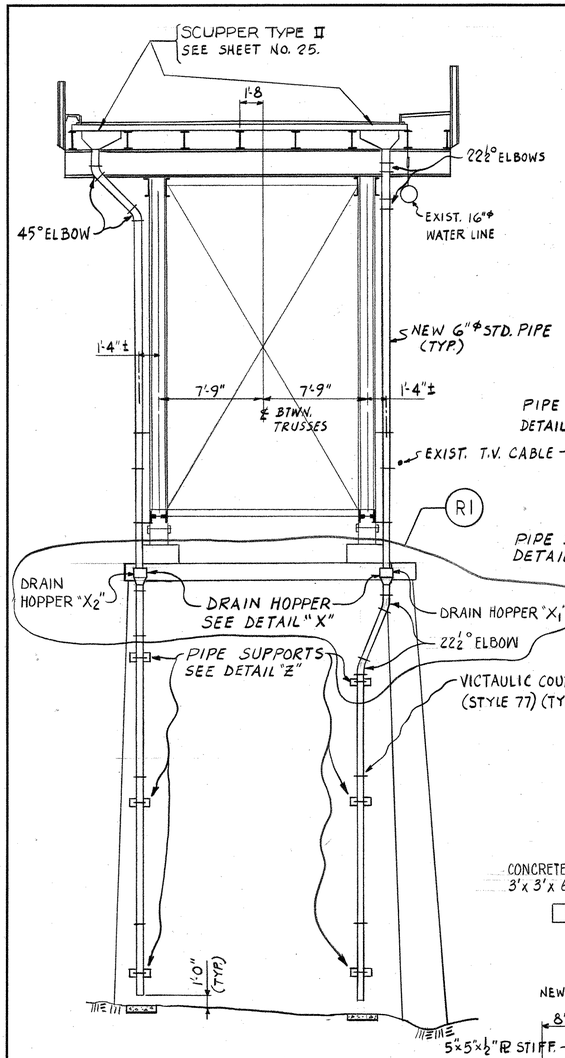

SECTION THROUGH ROADWAY
DRAINAGE AT PIER NO. 9

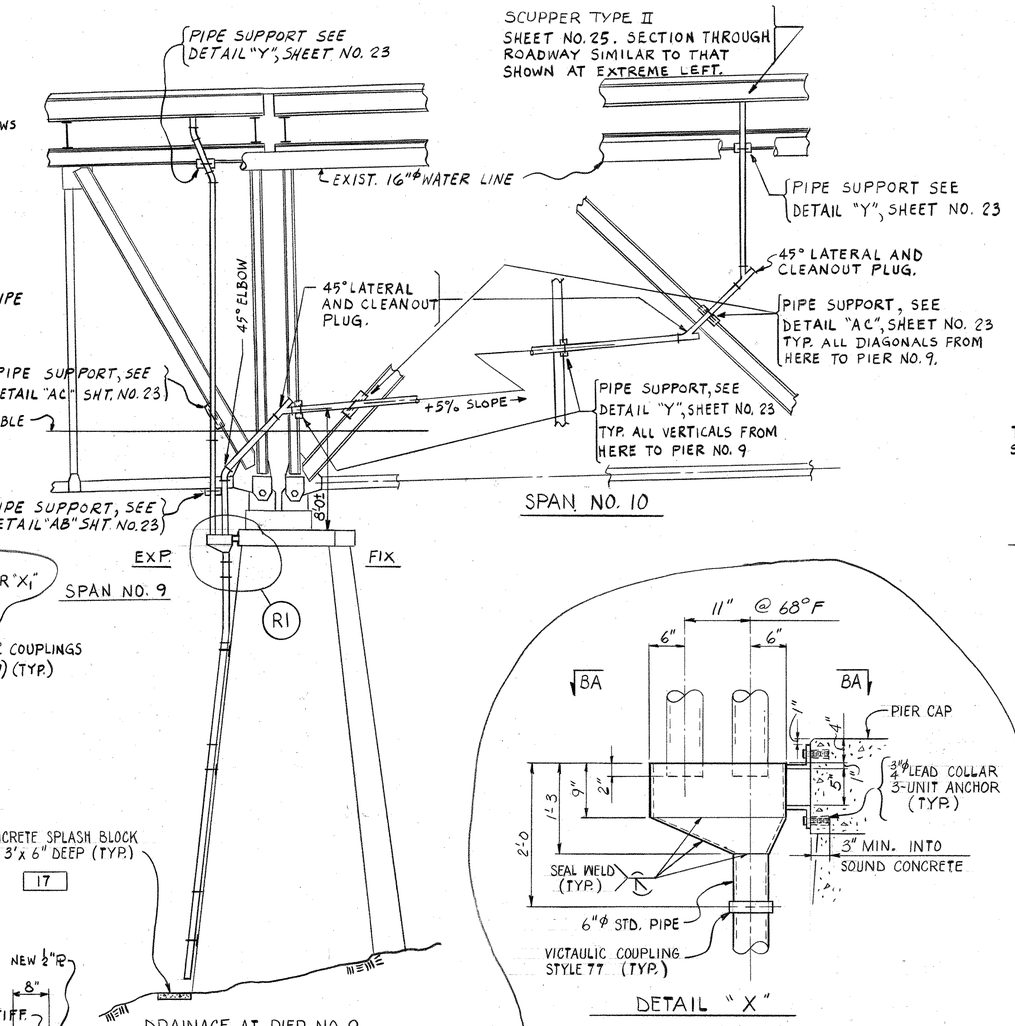

DETAIL "AK"
SCALE ¾"=1'-0

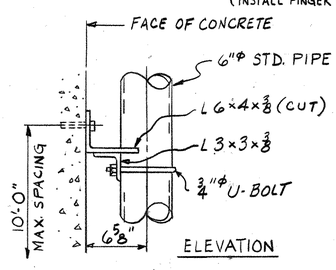

PIPE SUPPORT DETAIL - "Z"
SCALE 1½"=1'-0

DETAIL "X"
SCALE : 1"=1'-0

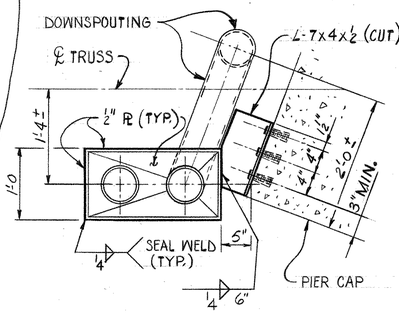

DRAIN HOPPER "X1"

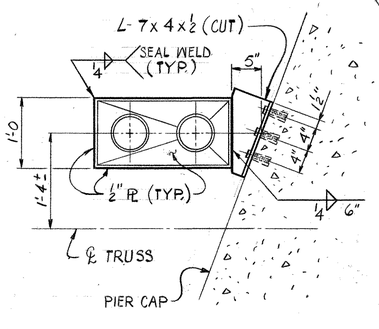

DRAIN HOPPER "X2"

VIEW BA-BA
SCALE: 1"=1'-0

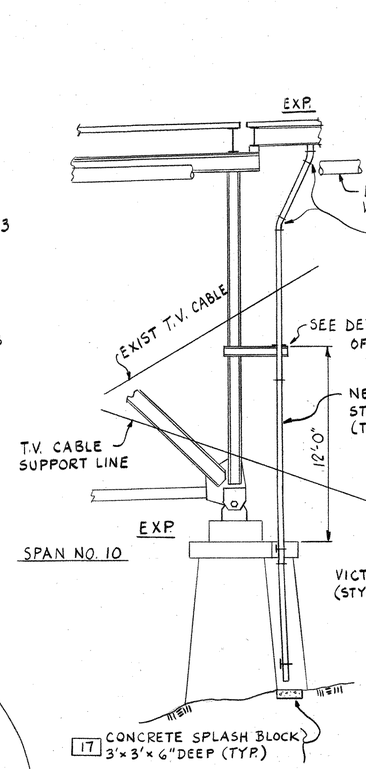

DRAINAGE AT PIER NO. 10

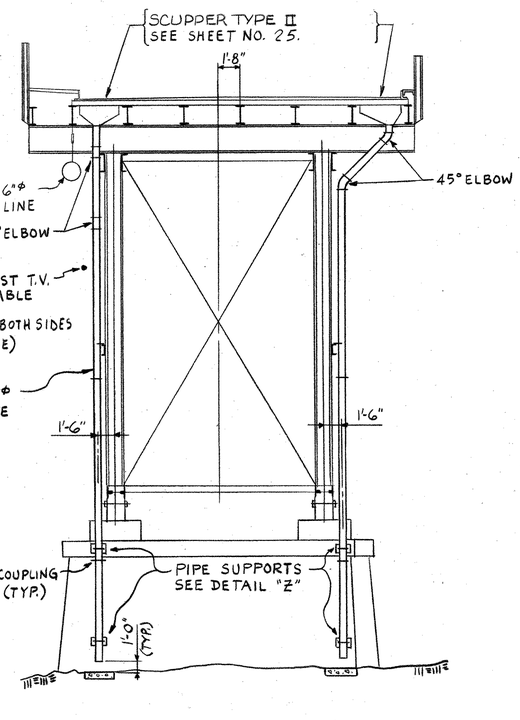

SECTION THROUGH ROADWAY
DRAINAGE AT PIER NO. 10

NOTE:
ALL DOWNSPOUTING AND SUPPORTS PAID UNDER ITEM 4.

Mark	Description	By	Chk'd.	App'd.	Date
	REVISIONS				
R1	REVISED DETAIL "X" & DRAINAGE AT PIER NO. 9.	ERW	M.P.F.	N.H.U.	8-19-76

Commonwealth of Pennsylvania
DEPARTMENT OF TRANSPORTATION
BUREAU OF DESIGN

BEAVER COUNTY
L.R. 04017 SEC. 6 STA. 49 + 74

REHABILITATION OF THE KOPPEL BRIDGE

OVER THE
P. & L.E. R.R., PENN CENTRAL R.R. & BEAVER RIVER
DRAINAGE

APPROVED MAR 9 1976
B Z Kotalik
BRIDGE ENGINEER
0021076

SHEET 24 OF 33

S-11862

K&E 18 1153 9-73 W2711•

7530-2350-0200

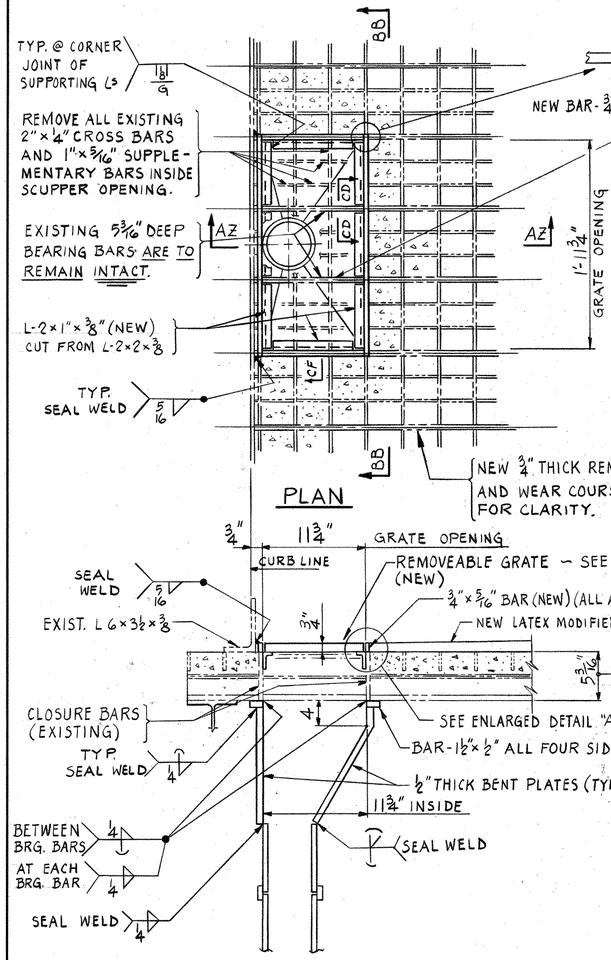

PLAN

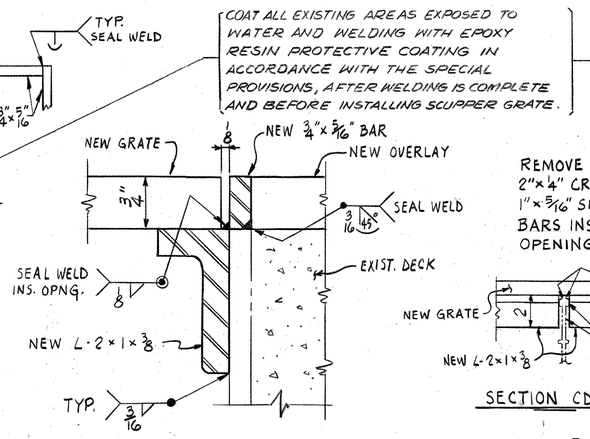

DETAIL "AD"
FULL SIZE

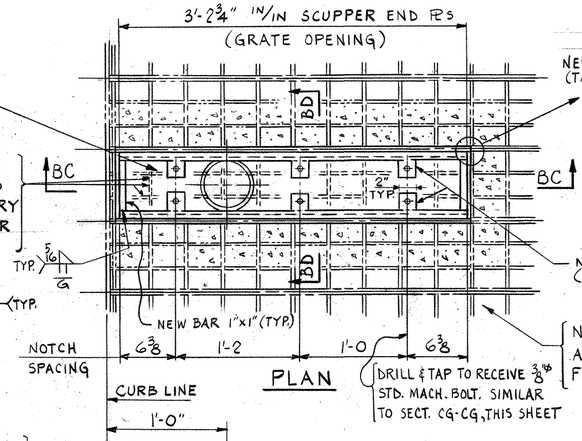

PLAN

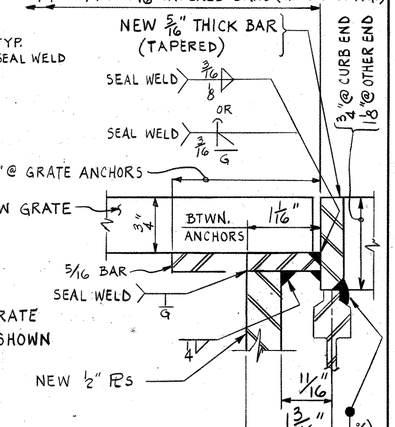

SECTION "AZ-AZ"

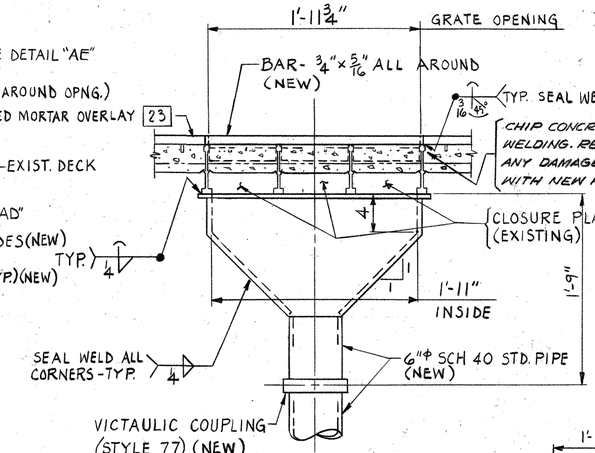

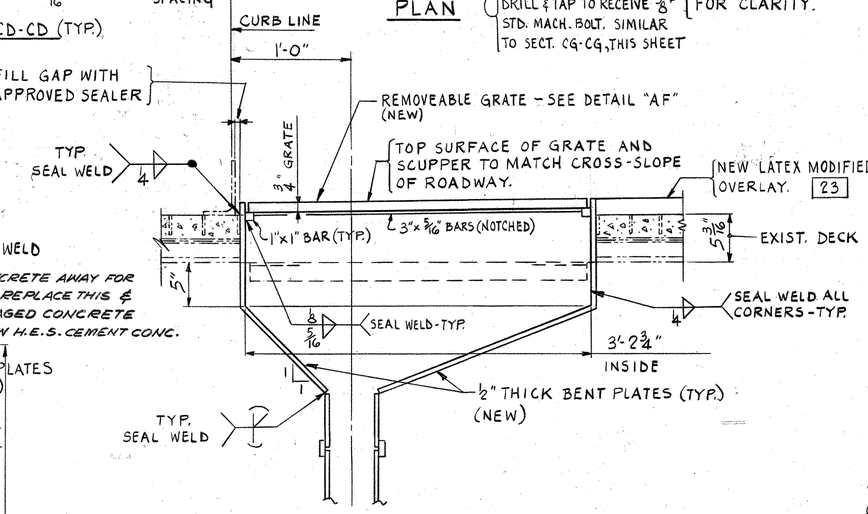

SECTION "BC-BC"

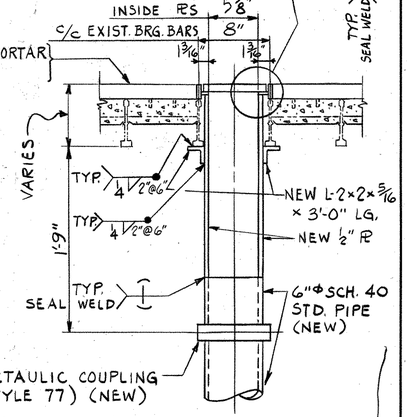

SECTION "BD-BD"

6

SPECIAL SCUPPER, TYPE I

SCALE 1½" = 1'-0"

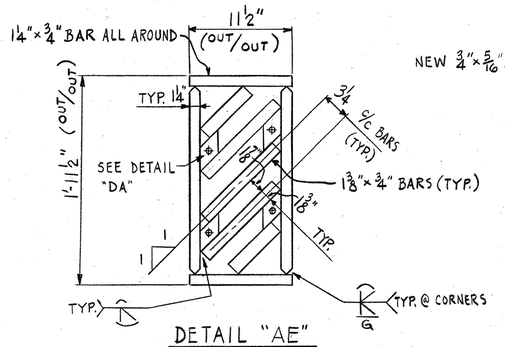

DETAIL "AE"
(REMOVEABLE GRATE) 1½" = 1'-0"

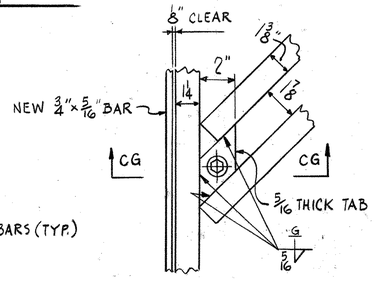

DETAIL "DA"
3" = 1'-0"
(SHOWN WITH GRATE IN FINAL POSITION IN NEW SCUPPER.)

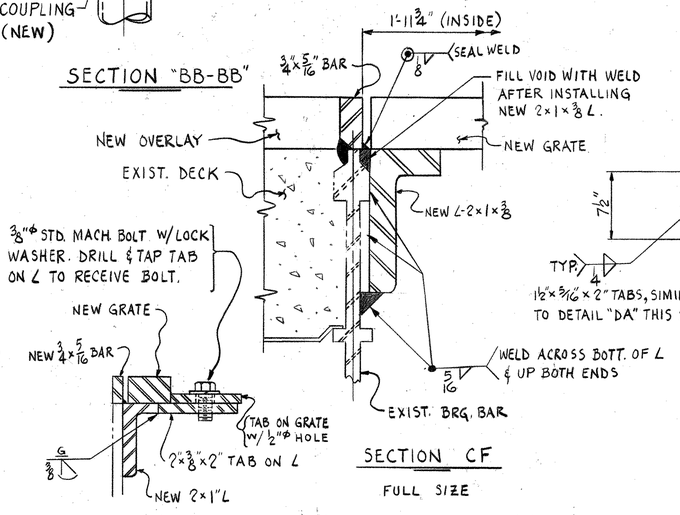

SECTION "BB-BB"

SECT. CG-CG

SECTION CF
FULL SIZE

14

SPECIAL SCUPPER TYPE II

SCALE 1½" = 1'-0"

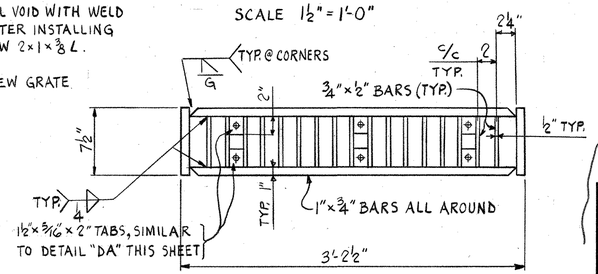

DETAIL "AF"
(REMOVEABLE GRATE) 1½" = 1'-0

NOTES
ALL REMOVEABLE GRATES AND FASTENERS SHALL BE GALVANIZED.
FOR SCUPPER LOCATIONS SEE SHEET 26.

R1
ENTIRE SHEET

Mark	Description	By	Chk'd.	App'd.	Date
R1	REVISED TYPE I & II SCUPPER GRATES, GRATE SUPPORTS & OPENINGS DUE TO REVISED THICKNESS OF WEARING COURSE. REVISION AFFECTS EVERY PLAN, SECTION & DETAIL ON THIS SHEET.	R.A.B.	M.P.F.	N.H.U.	8-19-76
REVISIONS					

Commonwealth of Pennsylvania
DEPARTMENT OF TRANSPORTATION
BUREAU OF DESIGN

BEAVER COUNTY
L.R. 04017 SEC. 6 STA. 49 + 74

REHABILITATION OF THE KOPPEL BRIDGE
OVER THE
P. & L.E. R.R., PENN CENTRAL R.R. & BEAVER RIVER
DRAINAGE

APPROVED MAR 9 1976
B.Z. Kotalik
BRIDGE ENGINEER
0021077

SHEET 25 OF 33

S-11862

K&E 19 1153 9-73 W2711-

7530-2350-0200

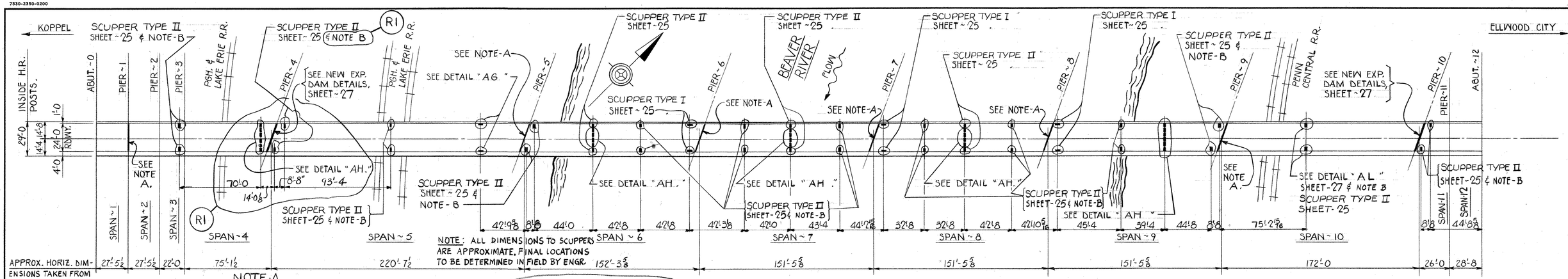

NOTE A

FOR WORK AT LOCATIONS INDICATED ON PLAN, REFER TO TYPICAL CURB AND EXPANSION DAM ALTERATION DETAILS ON THIS SHEET

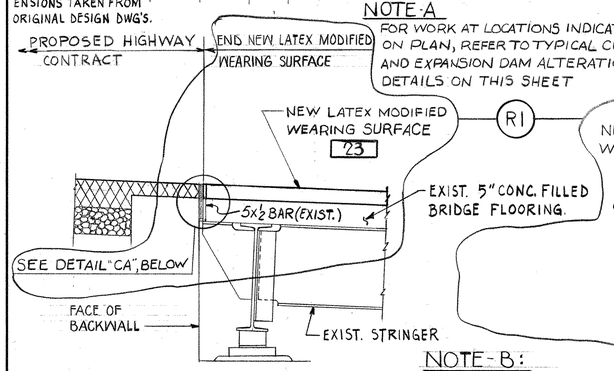

JOINT AT BACKWALL

ABUT.-0 (SHOWN)
ABUT.-12 (OPP. HAND)

SCALE: 3/4" = 1'-0

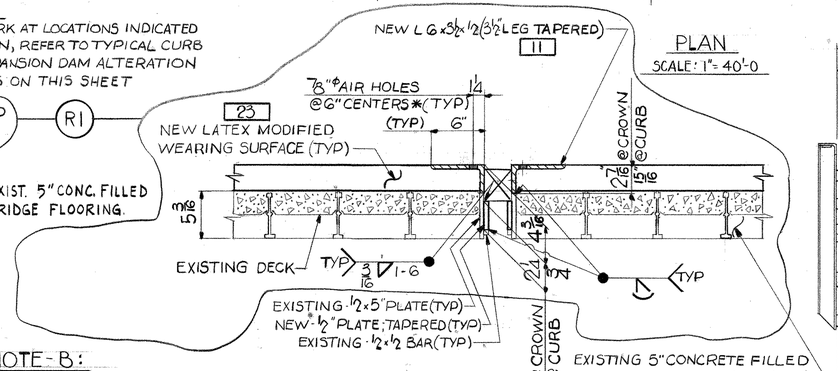

PLAN

SCALE: 1" = 40'-0

NOTE-B:

EXISTING CONCRETE FILL TO BE REMOVED FOR NEW SCUPPER LOCATIONS IN ACCORDANCE WITH ITEMS 2056-0565 AND 2056-0566 OF THE SPECIAL PROVISIONS.

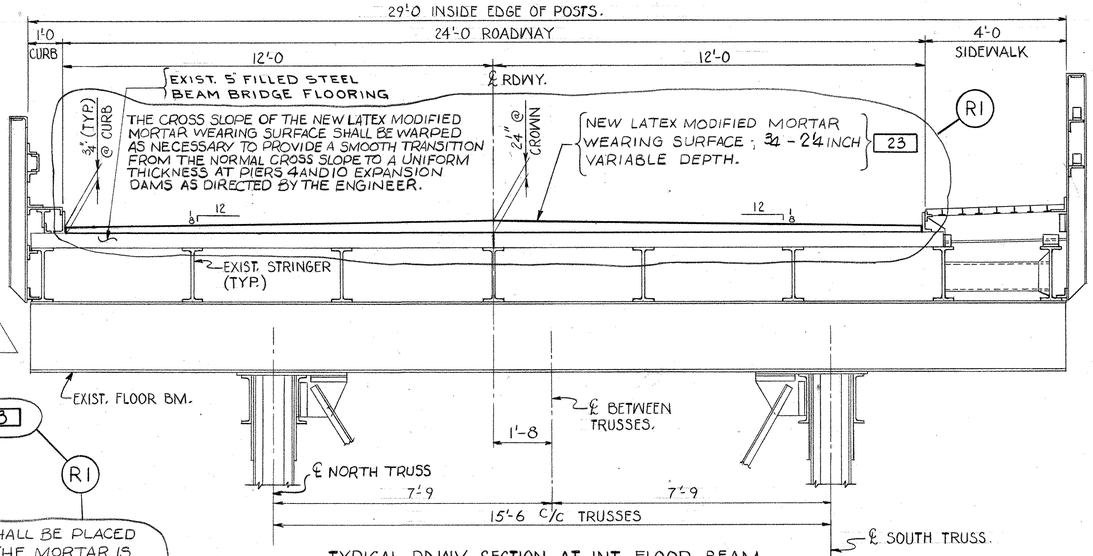

TYPICAL RDWY. SECTION AT INT. FLOOR BEAM LOOKING EAST

SCALE: 1/2" = 1'-0

1. REMOVE EXISTING COMPRESSION SEAL
2. INSTALL NEW PLATES AND ANGLES 11
3. INSTALL NEW LATEX MODIFIED MORTAR WEARING SURFACE 23
4. REINSTALL EXISTING COMPRESSION SEAL 11

TYPICAL EXP. DAM ALTERATION

FOR PIERS-1,5,6,7,8 & 9

SCALE: 1 1/2" = 1'-0

R1

*LATEX MODIFIED MORTAR SHALL BE PLACED UNDER THE ANGLES UNTIL THE MORTAR IS FORCED THROUGH THE 7/8"ø HOLES. STRIKE OFF EXCESS MORTAR. AFTER THE MORTAR HAS CURED, INSPECT THE HOLES AND REMOVE UNSOUND MORTAR. CLEAN THE HOLES WITH AN AIR JET AND FILL WITH AN APPROVED SEALER.

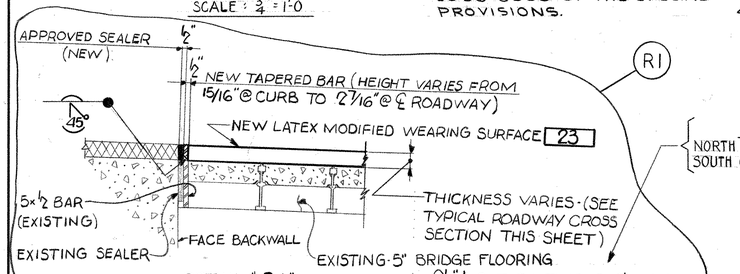

DETAIL "CA"

SCALE: 1 1/2" = 1'-0

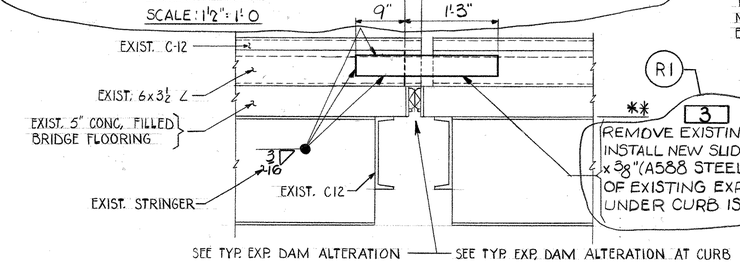

TYPICAL CURB ALTERATION

FOR PIERS-5,6,7,8 & 9 (SHOWN)
FOR PIER-1 (AS SHOWN ABOVE MRK. **)

SCALE: 1" = 1'-0

R1

** 3

REMOVE EXISTING SLIDING PLATE. INSTALL NEW SLIDING PLATE, 3 3/4 x 3/8" (A588 STEEL) AFTER ALTERATION OF EXISTING EXPANSION DAM UNDER CURB IS COMPLETED.

NOTE
NORTH CURB SHOWN
SOUTH CURB SIMILAR

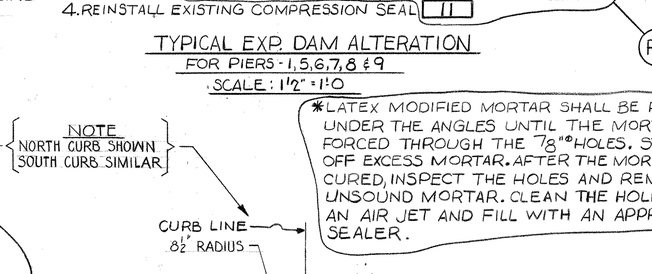

TYPICAL EXP. DAM ALTERATION AT CURB

FOR PIERS-1,5,6,7,8 & 9

SCALE: 1" = 1'-0

R1

NOTE "P"
NEW FORM PANS (TYPICAL) (IDENTICAL TO EXISTING) INSTALLED UPSIDE DOWN FROM UNDERSIDE OF DECK. TACK WELD IN PLACE. 11

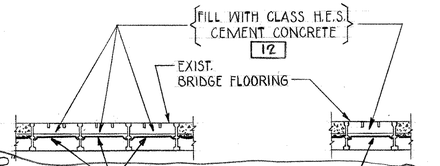

DETAIL "AG" DETAIL "AH"

SCALE: 1" = 1'-0

Mark	Description	By	Chk'd.	App'd.	Date
R1	REVISED TYPE & THICKNESS OF WEARING SURFACE, REVISED JOINT AT ABUT., REVISED TYP. EXP. DAM ALTERATION, REVISED SCUPPERS AT PIER NO. 4. MOVED NOTE "P".	M.C.G.	M.P.F.	N.H.U.	8-19-76
REVISIONS					

Commonwealth of Pennsylvania
DEPARTMENT OF TRANSPORTATION
BUREAU OF DESIGN

BEAVER COUNTY
L.R. 04017 SEC. 6 STA. 49 + 74

REHABILITATION OF THE KOPPEL BRIDGE

OVER THE
P. & L.E. R.R., PENN CENTRAL R.R. & BEAVER RIVER
PLAN OF DECK ALTERATIONS FOR BITUMINOUS SURFACE

APPROVED MAR 9 1976
B Z Kotalik
BRIDGE ENGINEER
0021078

SHEET 26 OF 33

S-11862

K&E 19 1153 9-73 W2711-

7530-2350-0200

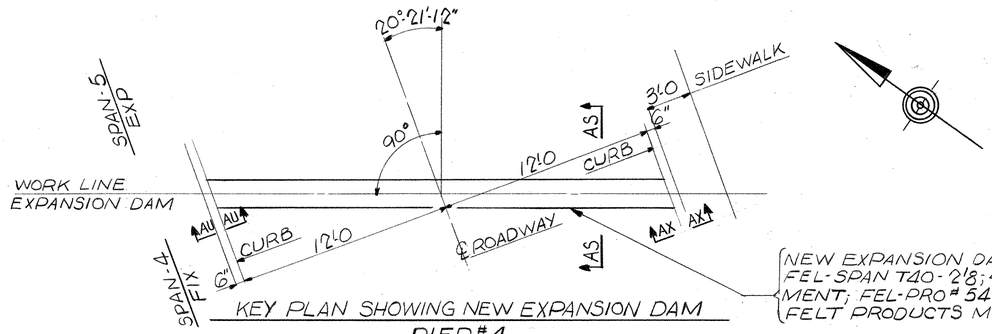

KEY PLAN SHOWING NEW EXPANSION DAM
PIER # 4

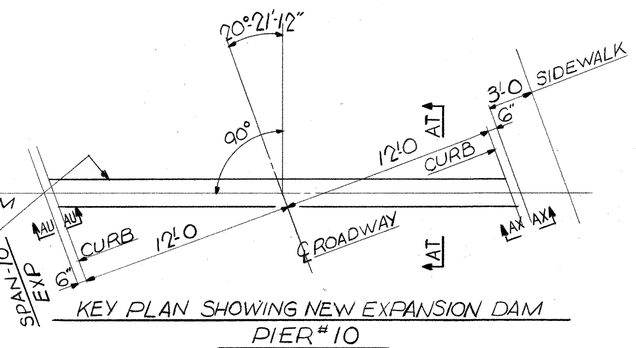

KEY PLAN SHOWING NEW EXPANSION DAM
PIER # 10

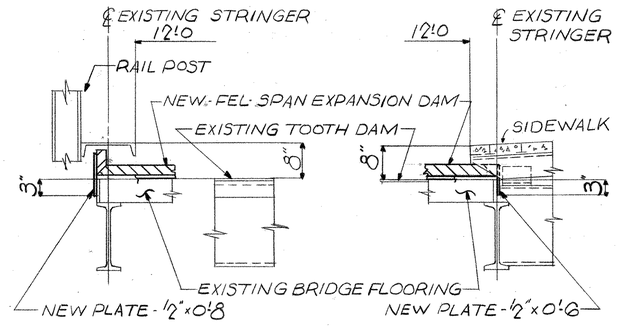

ENLARGED SECTION - "AU-AU"
(SCALE: 3/4" = 1'-0)

ENLARGED SECTION - "AX-AX"
(SCALE: 3/4" = 1'-0)

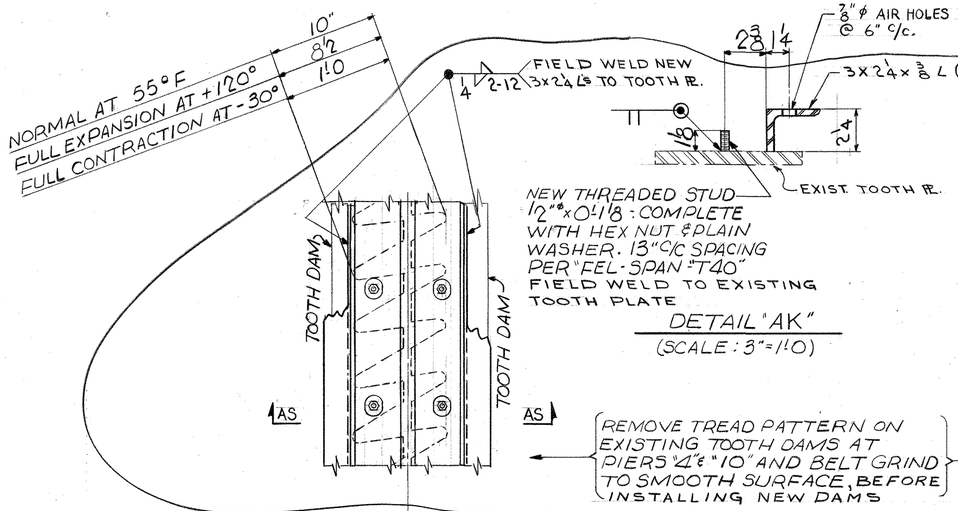

DETAIL "AK"
(SCALE: 3" = 1'-0)

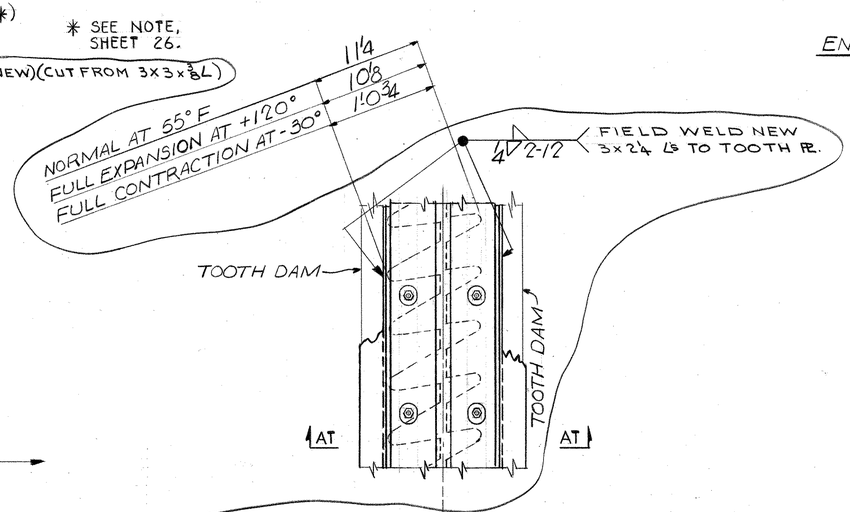

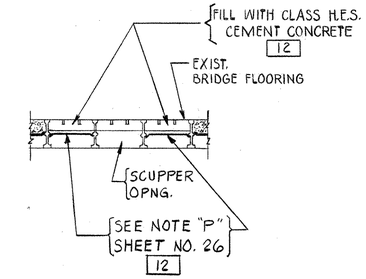

DETAIL "AL"

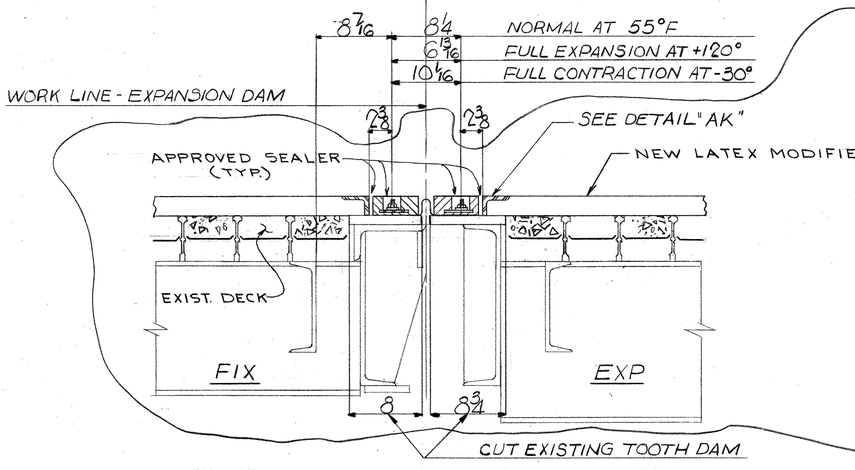

ENLARGED SECTION - "AS-AS"
(SCALE: 1 1/2" = 1'-0)

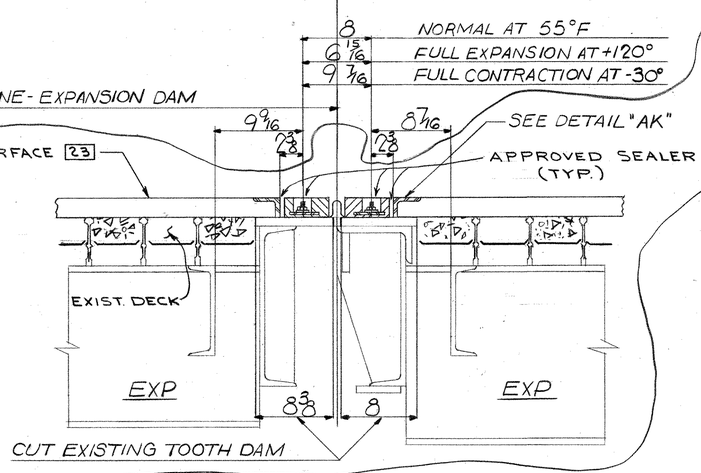

ENLARGED SECTION - "AT-AT"
(SCALE: 1 1/2" = 1'-0)

NOTE: ALL WORK THIS SHEET TO BE PAID FOR UNDER 10 UNLESS NOTED

Mark	Description	By	Chk'd.	App'd.	Date
	REVISIONS				
R1	REVISED DETAIL "AK", REVISED SECTIONS & PLANS "AS-AS" & "AT-AT"	R.A.B.	M.P.F.	N.H.U.	8-19-76

Commonwealth of Pennsylvania
DEPARTMENT OF TRANSPORTATION
BUREAU OF DESIGN

BEAVER COUNTY
L.R. 04017 SEC. 6 STA. 49 + 74

REHABILITATION OF THE KOPPEL BRIDGE
OVER THE
P & L.E. R.R., PENN CENTRAL R.R. & BEAVER RIVER
EXPANSION DAM DETAILS, PIERS 4 & 10

APPROVED MAR 9 1976
B J Kotalik
BRIDGE ENGINEER

0021079

SHEET 27 OF 33

S-11862

K&E 19 1153 9-73 W2711+

7530-2350-0200

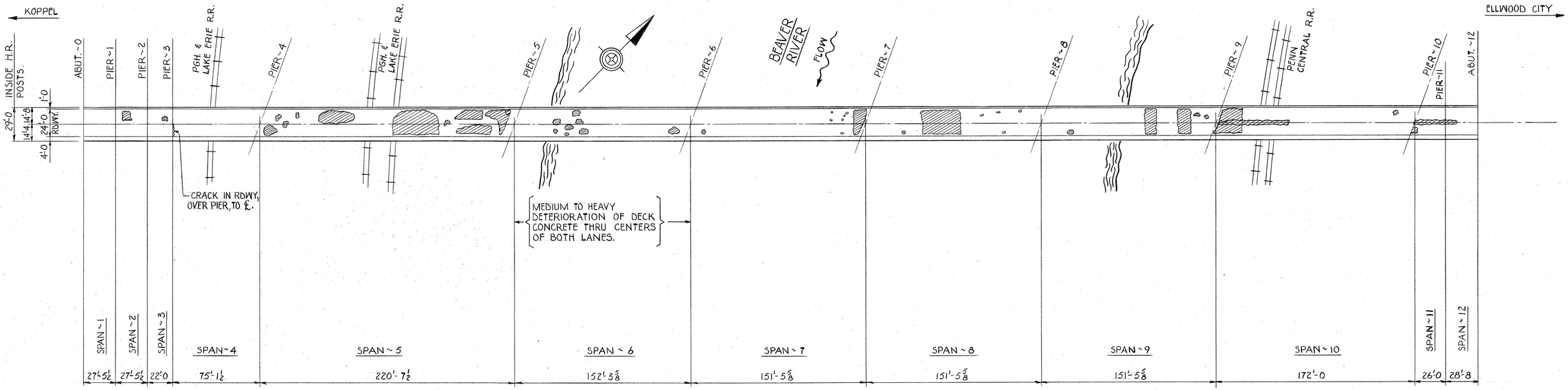

DECK PLAN

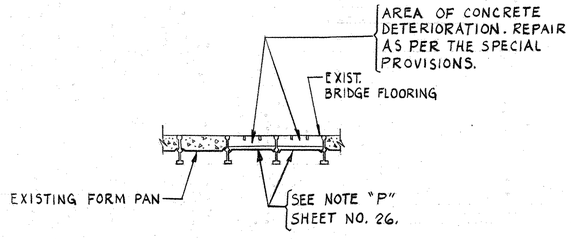

TYPICAL DECK REPAIR DETAIL

NOTES:

FOR DESCRIPTION OF DECK CONCRETE REPAIRS, SEE ITEM 2000-0008 OF THE SPECIAL PROVISIONS.

▨ HATCHED AREAS ON PLAN INDICATE AREAS OF POSSIBLE DECK CONCRETE DETERIORATION TO BE REPAIRED.

ALL WORK THIS SHEET PAID FOR UNDER [13]. AREAS TO BE REPAIRED UNDER THIS ITEM SHALL BE CAREFULLY DELINEATED BY THE ENGINEER.

Mark	Description	By	Chk'd.	App'd.	Date
	REVISIONS				

Commonwealth of Pennsylvania
DEPARTMENT OF TRANSPORTATION
BUREAU OF DESIGN

BEAVER COUNTY
L.R. 04017 SEC. 6 STA. 49 + 74

REHABILITATION OF THE KOPPEL BRIDGE

OVER THE
P. & L.E. R.R., PENN CENTRAL R.R. & BEAVER RIVER

GENERAL PLAN OF DECK REPAIRS

APPROVED MAR 9 1976
B Z Kotalik
BRIDGE ENGINEER
0021080

SHEET 28 OF 33

S-11862

K&E 19 1133 9-73 W2711-

7530-2350-0200

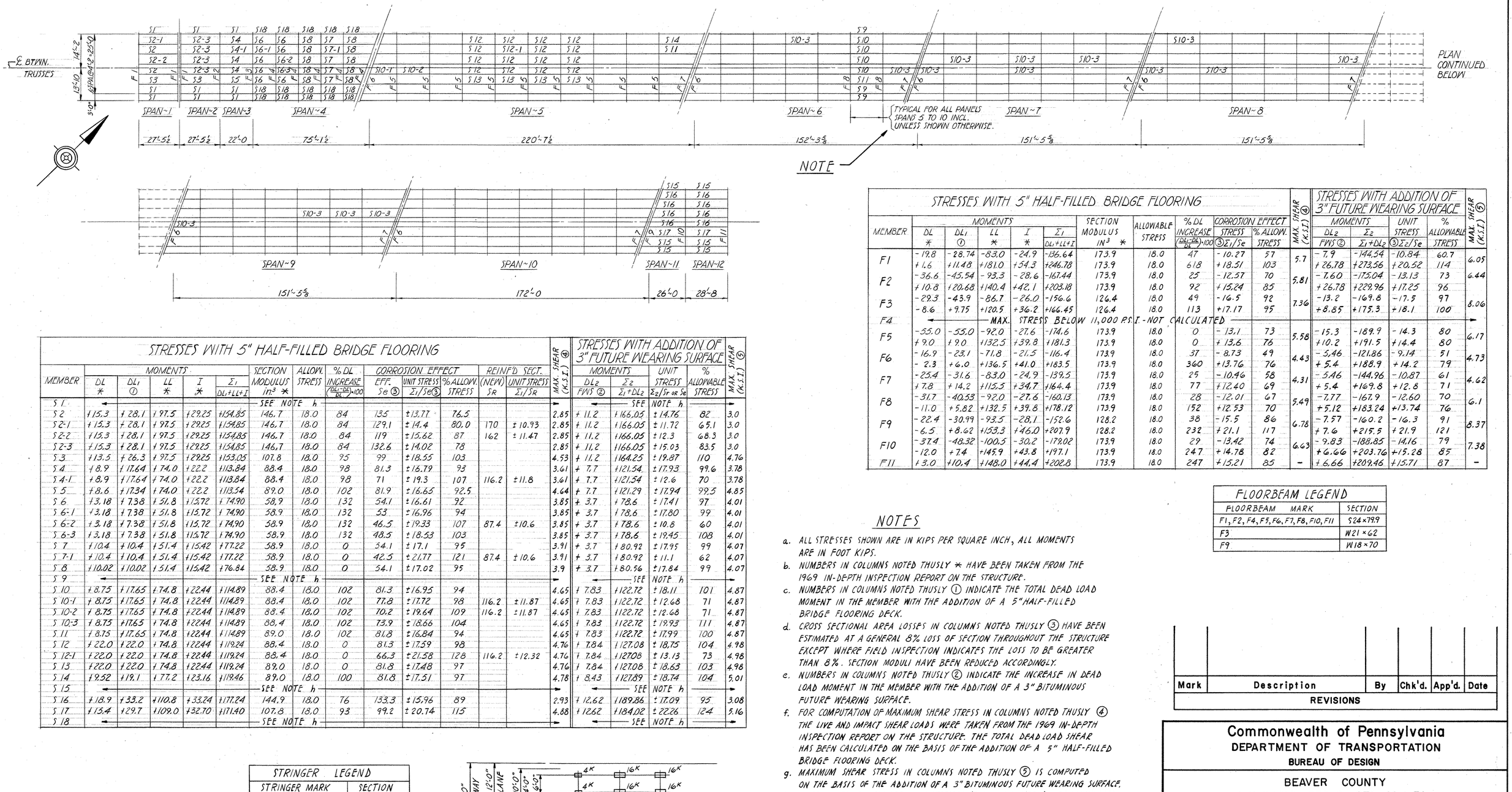

STRESSES WITH 5" HALF-FILLED BRIDGE FLOORING

MEMBER	MOMENTS DL *	DL1 ①	LL *	I *	Σ1 DL+LL+I	SECTION MODULUS in³ *	ALLOWABLE STRESS	% DL INCREASE (DL1−DL)/DL ·100	CORROSION EFFECT EFF. Se ③	CORROSION EFFECT UNIT STRESS Σ1/Se ③	CORROSION EFFECT % ALLOW. STRESS	REINF'D SECT. (NEW) SR	REINF'D SECT. UNIT STRESS Σ1/SR	MAX. SHEAR (K.S.I.) ④
S1	◄					SEE NOTE h								►
S2	+15.3	+28.1	+97.5	+29.25	+154.85	146.7	18.0	84	135	±13.77	76.5			2.85
S2-1	+15.3	+28.1	+97.5	+29.25	+154.85	146.7	18.0	84	129.1	±14.4	80.0	170	±10.93	2.85
S2-2	+15.3	+28.1	+97.5	+29.25	+154.85	146.7	18.0	84	119	±15.62	87	162	±11.47	2.85
S2-3	+15.3	+28.1	+97.5	+29.25	+154.85	146.7	18.0	84	132.6	±14.02	78			2.85
S3	+13.5	+26.3	+97.5	+29.25	+153.05	107.8	18.0	95	99	±18.55	103			4.53
S4	+8.9	+17.64	+74.0	+22.2	+113.84	88.4	18.0	98	81.3	±16.79	93			3.61
S4-1	+8.9	+17.64	+74.0	+22.2	+113.84	88.4	18.0	98	71	±19.3	107	116.2	±11.8	3.61
S5	+8.6	+17.34	+74.0	+22.2	+113.54	89.0	18.0	102	81.9	±16.65	92.5			4.64
S6	+3.18	+7.38	+51.8	+15.72	+74.90	58.9	18.0	132	54.1	±16.61	92			3.85
S6-1	+3.18	+7.38	+51.8	+15.72	+74.90	58.9	18.0	132	53	±16.96	94			3.85
S6-2	+3.18	+7.38	+51.8	+15.72	+74.90	58.9	18.0	132	46.5	±19.33	107	87.4	±10.6	3.85
S6-3	+3.18	+7.38	+51.8	+15.72	+74.90	58.9	18.0	132	48.5	±18.53	103			3.85
S7	+10.4	+10.4	+51.4	+15.42	+77.22	58.9	18.0	0	54.1	±17.1	95			3.91
S7-1	+10.4	+10.4	+51.4	+15.42	+77.22	58.9	18.0	0	42.5	±21.77	121	87.4	±10.6	3.91
S8	+10.02	+10.02	+51.4	+15.42	+76.84	58.9	18.0	0	54.1	±17.02	95			3.9
S9	◄					SEE NOTE h								►
S10	+8.75	+17.65	+74.8	+22.44	+114.89	88.4	18.0	102	81.3	±16.95	94			4.65
S10-1	+8.75	+17.65	+74.8	+22.44	+114.89	88.4	18.0	102	77.8	±17.72	98	116.2	±11.87	4.65
S10-2	+8.75	+17.65	+74.8	+22.44	+114.89	88.4	18.0	102	70.2	±19.64	109	116.2	±11.87	4.65
S10-3	+8.75	+17.65	+74.8	+22.44	+114.89	88.4	18.0	102	73.9	±18.66	104			4.65
S11	+8.75	+17.65	+74.8	+22.44	+114.89	89.0	18.0	102	81.8	±16.84	94			4.65
S12	+22.0	+22.0	+74.8	+22.44	+119.24	88.4	18.0	0	81.3	±17.59	98			4.76
S12-1	+22.0	+22.0	+74.8	+22.44	+119.24	88.4	18.0	0	66.3	±21.58	128	116.2	±12.32	4.76
S13	+22.0	+22.0	+74.8	+22.44	+119.24	89.0	18.0	0	81.8	±17.48	97			4.76
S14	+19.52	+19.1	+77.2	+23.16	+119.46	89.0	18.0	100	81.8	±17.51	97			4.78
S15	◄					SEE NOTE h								►
S16	+18.9	+33.2	+110.8	+33.24	+177.24	144.9	18.0	76	133.3	±15.96	89			2.93
S17	+15.4	+29.7	+109.0	+32.70	+171.40	107.8	18.0	93	99.2	±20.74	115			4.88
S18	◄					SEE NOTE h								►

STRESSES WITH ADDITION OF 3" FUTURE WEARING SURFACE

MEMBER	MOMENTS DL2 FWS ②	MOMENTS Σ2 Σ1+DL2	UNIT STRESS Σ2/Sr OR Se	% ALLOWABLE STRESS	MAX. SHEAR (K.S.I.) ⑤
S1	◄	SEE NOTE h			►
S2	+11.2	+166.05	±14.76	82	3.0
S2-1	+11.2	+166.05	±11.72	65.1	3.0
S2-2	+11.2	+166.05	±12.3	68.3	3.0
S2-3	+11.2	+166.05	±15.03	83.5	3.0
S3	+11.2	+164.25	±19.87	110	4.76
S4	+7.7	+121.54	±17.93	99.6	3.78
S4-1	+7.7	+121.54	±12.6	70	3.78
S5	+7.7	+121.29	±17.94	99.5	4.85
S6	+3.7	+78.6	±17.41	97	4.01
S6-1	+3.7	+78.6	±17.80	99	4.01
S6-2	+3.7	+78.6	±10.8	60	4.01
S6-3	+3.7	+78.6	±19.45	108	4.01
S7	+3.7	+80.92	±17.95	99	4.07
S7-1	+3.7	+80.92	±11.1	62	4.07
S8	+3.7	+80.56	±17.84	99	4.07
S9	◄	SEE NOTE h			►
S10	+7.83	+122.72	±18.11	101	4.87
S10-1	+7.83	+122.72	±12.68	71	4.87
S10-2	+7.83	+122.72	±12.68	71	4.87
S10-3	+7.83	+122.72	±19.93	111	4.87
S11	+7.83	+122.72	±17.99	100	4.87
S12	+7.84	+127.08	±18.75	104	4.98
S12-1	+7.84	+127.08	±13.13	73	4.98
S13	+7.84	+127.08	±18.63	103	4.98
S14	+8.43	+127.89	±18.74	104	5.01
S15	◄	SEE NOTE h			►
S16	+12.62	+189.86	±17.09	95	3.08
S17	+12.62	+184.02	±22.26	124	5.16
S18	◄	SEE NOTE h			►

STRESSES WITH 5" HALF-FILLED BRIDGE FLOORING

MEMBER	MOMENTS DL *	DL1 ①	LL *	I *	Σ1 DL+LL+I	SECTION MODULUS in³ *	ALLOWABLE STRESS	% DL INCREASE (DL1−DL)/DL ·100	CORROSION EFFECT STRESS ③ Σ1/Se	CORROSION EFFECT % ALLOW. STRESS	MAX. SHEAR (K.S.I.) ④
F1	-19.8	-28.74	-83.0	-24.9	-136.64	173.9	18.0	47	-10.27	57	5.7
	+1.6	+11.48	+181.0	+54.3	+246.78	173.9	18.0	618	+18.51	103	
F2	-36.6	-45.54	-93.3	-28.6	-167.44	173.9	18.0	25	-12.57	70	5.81
	+10.8	+20.68	+140.4	+42.1	+203.18	173.9	18.0	92	+15.24	85	
F3	-29.3	-43.9	-86.7	-26.0	-156.6	126.4	18.0	49	-16.5	92	7.36
	-8.6	+9.75	+120.5	+36.2	+166.45	126.4	18.0	113	+17.17	95	
F4	◄	MAX. STRESS BELOW 11,000 P.S.I. - NOT CALCULATED									►
F5	-55.0	-55.0	-92.0	-27.6	-174.6	173.9	18.0	0	-13.1	73	5.58
	+9.0	+9.0	+132.5	+39.8	+181.3	173.9	18.0	0	+13.6	76	
F6	-16.9	-23.1	-71.8	-21.5	-116.4	173.9	18.0	37	-8.73	49	4.43
	-2.3	+6.0	+136.5	+41.0	+183.5	173.9	18.0	360	+13.76	76	
F7	-25.4	-31.6	-83.0	-24.9	-139.5	173.9	18.0	25	-10.46	58	4.31
	+7.8	+14.2	+115.5	+34.7	+164.4	173.9	18.0	77	+12.40	69	
F8	-31.7	-40.53	-92.0	-27.6	-160.13	173.9	18.0	28	-12.01	67	5.49
	-11.0	+5.82	+132.5	+39.8	+178.12	173.9	18.0	152	+12.53	70	
F9	-22.4	-30.99	-93.5	-28.1	-152.6	128.2	18.0	38	-15.5	86	6.78
	-6.5	+8.62	+153.3	+46.0	+207.9	128.2	18.0	232	+21.1	117	
F10	-37.4	-48.32	-100.5	-30.2	-179.02	173.9	18.0	29	-13.42	74	6.63
	-12.0	+7.4	+145.9	+43.8	+197.1	173.9	18.0	247	+14.78	82	
F11	+3.0	+10.4	+148.0	+44.4	+202.8	173.9	18.0	247	+15.21	85	-

STRESSES WITH ADDITION OF 3" FUTURE WEARING SURFACE

MEMBER	MOMENTS DL2 FWS ②	MOMENTS Σ2 Σ1+DL2	UNIT STRESS Σ2/Sr OR Se	% ALLOWABLE STRESS	MAX. SHEAR (K.S.I.) ⑤
F1	-7.9	-144.54	-10.84	60.7	6.05
	+26.78	+273.56	+20.52	114	
F2	-7.60	-175.04	-13.13	73	6.44
	+26.78	+229.96	+17.25	96	
F3	-13.2	-169.8	-17.5	97	8.06
	+8.85	+175.3	+18.1	100	
F4	◄	MAX. STRESS BELOW 11,000 P.S.I. - NOT CALCULATED			►
F5	-15.3	-189.9	-14.3	80	6.17
	+10.2	+191.5	+14.4	80	
F6	-5.46	-121.86	-9.14	51	4.73
	+5.4	+188.9	+14.2	79	
F7	-5.46	-144.96	-10.87	61	4.62
	+5.4	+169.8	+12.8	71	
F8	-7.77	-167.9	-12.60	70	6.1
	+5.12	+183.24	+13.74	76	
F9	-7.57	-160.2	-16.3	91	8.37
	+7.6	+215.5	+21.9	121	
F10	-9.83	-188.85	-14.16	79	7.38
	+6.66	+203.76	+15.28	85	
F11	+6.66	+209.46	+15.71	87	-

FLOORBEAM LEGEND

FLOORBEAM MARK	SECTION
F1, F2, F4, F5, F6, F7, F8, F10, F11	S24×79.9
F3	W21×62
F9	W18×70

STRINGER LEGEND

STRINGER MARK	SECTION
S1, S5, S9, S11, S13, S15	W18×50
S2, S16	S20×80
S3, S17	W18×60
S4, S10, S12, S14	W18×55
S6, S7, S8, S18	S15×42.9

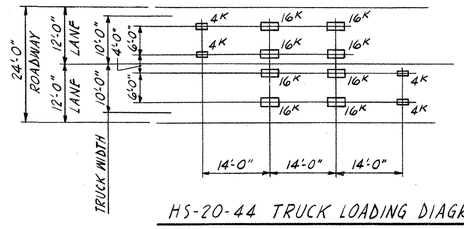

HS-20-44 TRUCK LOADING DIAGRAM

NOTES

a. ALL STRESSES SHOWN ARE IN KIPS PER SQUARE INCH, ALL MOMENTS ARE IN FOOT KIPS.
b. NUMBERS IN COLUMNS NOTED THUSLY * HAVE BEEN TAKEN FROM THE 1969 IN-DEPTH INSPECTION REPORT ON THE STRUCTURE.
c. NUMBERS IN COLUMNS NOTED THUSLY ① INDICATE THE TOTAL DEAD LOAD MOMENT IN THE MEMBER WITH THE ADDITION OF A 5" HALF-FILLED BRIDGE FLOORING DECK.
d. CROSS SECTIONAL AREA LOSSES IN COLUMNS NOTED THUSLY ③ HAVE BEEN ESTIMATED AT A GENERAL 8% LOSS OF SECTION THROUGHOUT THE STRUCTURE EXCEPT WHERE FIELD INSPECTION INDICATES THE LOSS TO BE GREATER THAN 8%. SECTION MODULI HAVE BEEN REDUCED ACCORDINGLY.
e. NUMBERS IN COLUMNS NOTED THUSLY ② INDICATE THE INCREASE IN DEAD LOAD MOMENT IN THE MEMBER WITH THE ADDITION OF A 3" BITUMINOUS FUTURE WEARING SURFACE.
f. FOR COMPUTATION OF MAXIMUM SHEAR STRESS IN COLUMNS NOTED THUSLY ④ THE LIVE AND IMPACT SHEAR LOADS WERE TAKEN FROM THE 1969 IN-DEPTH INSPECTION REPORT ON THE STRUCTURE. THE TOTAL DEAD LOAD SHEAR HAS BEEN CALCULATED ON THE BASIS OF THE ADDITION OF A 5" HALF-FILLED BRIDGE FLOORING DECK.
g. MAXIMUM SHEAR STRESS IN COLUMNS NOTED THUSLY ⑤ IS COMPUTED ON THE BASIS OF THE ADDITION OF A 3" BITUMINOUS FUTURE WEARING SURFACE.
h. CURB OR FACIA STRINGER - LOW STRESSES (BELOW 11,000 P.S.I.) - NOT CALCULATED.

Mark	Description	By	Chk'd.	App'd.	Date
	REVISIONS				

Commonwealth of Pennsylvania
DEPARTMENT OF TRANSPORTATION
BUREAU OF DESIGN

BEAVER COUNTY
L.R. 04017 SEC. 6 STA. 49 + 74

REHABILITATION OF THE KOPPEL BRIDGE

OVER THE
P. & L.E. R.R., PENN CENTRAL R.R. & BEAVER RIVER

STRESS SHEET

APPROVED MAR 9 1976
B Z Kotalik
BRIDGE ENGINEER
0021081

SHEET 29 OF 33

S-11862

Kaℓ 19 1153 9-73 W2711•

7530-2350-0200

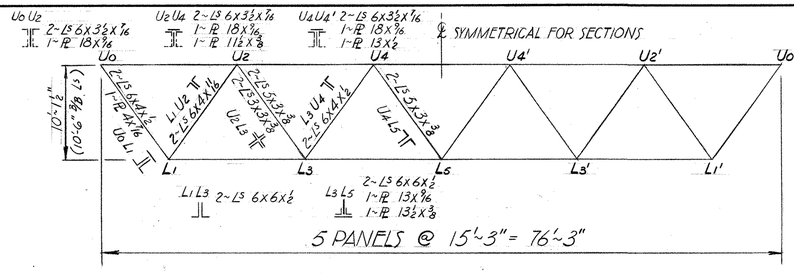

SPAN~4

STRESSES WITH 5" HALF-FILLED BRIDGE FLOORING

LOCATION		MEMBERS	STRESSES DL *	DL1 ①	LL *	I *	Σ1 DL+LL	AREAS □" NET An *	GROSS Ag *	LOSS (COR) ③	EFF. Ae	L/R *	ALLOW STRESS *	UNIT STRESS Σ1/Ae ③	% DL INCREASE (DL-DL①)/DL ×100	% ALLOWABLE STRESS	REINF'D AREA Ar	UNIT STRESS Σ1/Ar ③
TOP		U0 U2	-30.0	-34.7	-47.7	-11.8	-94.2	-	18.06	1.45	16.61	115	-10.6	-5.67	15.7	56.7	-	-
		U2 U4	-77.0	-87.9	-110.0	-27.3	-225.2	-	22.37	1.79	20.58	94.5	-12.0	-10.94	13.0	91.2	-	-
		U4 U4'	-97.8	-107.5	-140.3	-34.8	-282.6	-	24.56	1.97	22.59	82	-12.8	-12.51	9.9	97.7	-	-
		U4' U2'	-86.0	-87.9	-110.0	-27.3	-225.2	-	22.37	1.79	20.58	94.5	-12.0	-10.94	2.2	91.2	-	-
		U2' U0'	-35.4	-34.5	-49.1	-12.2	-96.0	-	18.06	1.45	16.61	115	-10.6	-5.78	-2.0	54.5	-	-
BOTTOM		L1 L3	+58.7	+70.3	+95.4	+23.6	+189.3	9.84	11.5	0.79	9.05	-	+18.0	+20.91	19.8	116.2	15.55	12.17
		L3 L5	+93.8	+107.5	+142.9	+35.4	+285.8	20.07	23.88	1.61	18.46	-	+18.0	+15.48	14.6	86.0	-	-
		L5 L3'	+101.3	+107.5	+142.9	+35.4	+285.8	20.07	23.88	1.61	18.46	-	+18.0	+15.48	6.1	86.0	-	-
		L3' L1'	+69.3	+70.3	+98.1	+24.3	+192.7	9.84	11.5	0.79	9.05	-	+18.0	+21.29	1.4	118.3	15.55	12.39
DIAGONALS		U0 L1	+49.8	+60.3	+79.4	+21.0	+160.7	9.59	11.25	0.77	8.82	-	+18.0	+18.22	21.0	101.2	-	-
		L1 U2	-47.6	-60.3	-79.4	-21.0	-160.7	-	12.80	1.03	11.77	86	-13.13	-13.65	26.7	104	-	-
		U2 L3	+30.3	+30.1	+55.5	+16.2	+101.8	7.5	9.94	3.0	6.9	-	+18.0	+14.75	0	82	†	-
					-10.4	-3.1												
		L3 U4	-27.8	-30.1	-55.5	-16.2	-101.8	-	9.50	3.0	8.74	88	-12.42	-11.64	8.2	93.7	◊	-
					+10.4	+3.1												
		U4 L5	+6.6	+6.6	+30.2	+9.1	+45.9	4.57	5.72	1.88	4.14	-	+18.0	+11.08	0	61.6	†	-
					-33.0	-10.0	-43.0				5.26	115.5	-10.7	-8.17		76.4	◊	-
		L5 U4'	-3.9	-3.9	-30.2	-9.1	-43.2	4.57	5.72	1.88	5.26	115.5	-10.7	-8.21	0	76.7	◊	-
					+33.0	+10.0	+43.0				4.14		+18.0	+10.39		57.7	†	-
		U4' L3'	-24.0	-30.1	-55.3	-16.1	-101.5	-	9.50	3.0	8.74	88	-12.42	-11.61	25.4	93.5	◊	-
					+6.3	+1.9												
		L3' U2'	+27.6	+30.1	+55.3	+16.1	+101.5	7.5	9.94	3.0	6.9	-	+18.0	+14.71	9.0	82	†	-
					-6.3	-1.9												
		U2' L1'	-56.0	-60.3	-82.1	-21.7	-164.1	-	12.80	1.03	11.77	86	-13.13	-13.94	7.7	106.1	-	-
		L1' U0'	+58.2	+60.3	+82.1	+21.7	+164.1	9.59	11.25	0.79	8.82	-	+18.0	+18.62	3.6	103.4	-	-

STRESSES WITH ADDITION OF 3" FUTURE WEARING SURFACE

MEMBERS	STRESSES DL2 FWS ②	Σ2 Σ1+DL2	UNIT③ STRESS Σ2/Ar or Ae	% ALLOWABLE STRESS
U0 U2	- 7.5	- 101.7	-6.12	61.2
U2 U4	- 18.9	- 243.9	-11.85	98.8
U4 U4'	- 23.1	- 305.7	-13.53	105.7
U4' U2'	- 18.9	- 243.9	-11.85	98.8
U2' U0'	- 7.5	- 103.5	-6.23	58.8
L1 L3	+ 15.1	+ 204.4	+ 13.14	73.0
L3 L5	+ 23.1	+ 308.9	+ 16.73	92.9
L5 L3'	+ 23.1	+ 308.9	+ 16.73	92.9
L3' L1'	+ 15.1	+ 207.8	+ 13.36	74.2
U0 L1	+ 13.0	+ 173.7	+ 19.69	109.4
L1 U2	- 13.0	- 173.7	- 14.76	112.4
U2 L3	+ 6.5	+ 108.3	+ 15.7	87
L3 U4	- 6.5	- 108.3	- 12.39	99.8
U4 L5	0	+ 45.9	+11.08	61.6
L5 U4'	0	-43.0	- 8.17	76.4
U4' L3'	0	-43.2	- 8.21	76.7
L3' U2'	0	+43.0	+10.39	57.7
U2' L1'	- 6.5	- 108.0	-12.36	99.5
L1' U0'	+ 6.5	+ 108.0	+ 15.65	87
U2' L1'	- 13.0	- 177.1	- 15.05	114.6
L1' U0'	+ 13.0	+ 177.1	+ 20.08	111.6

† CORRODED END OF DIAGONAL REINFORCED, NET SECTION AT OTHER END GOVERNS.

◊ CORRODED END OF DIAGONAL REINFORCED, GROSS SECTION OF MEMBER GOVERNS.

NOTES

a. ALL STRESSES SHOWN ARE IN KIPS PER SQUARE INCH, ALL LOADS ARE IN KIPS.

b. NUMBERS IN COLUMNS NOTED THUSLY * HAVE BEEN TAKEN FROM THE 1969 IN-DEPTH INSPECTION REPORT ON THE STRUCTURE.

c. NUMBERS IN COLUMNS NOTED THUSLY ① INDICATE THE TOTAL DEAD LOAD IN THE MEMBER WITH THE ADDITION OF A 5" HALF-FILLED BRIDGE FLOORING DECK.

d. NUMBERS IN COLUMNS NOTED THUSLY ② INDICATE THE INCREASE IN DEAD LOAD STRESS IN THE MEMBER WITH THE ADDITION OF A 3" BITUMINOUS FUTURE WEARING SURFACE.

e. CROSS-SECTIONAL AREA LOSS IN COLUMNS NOTED THUSLY ③ HAVE BEEN ESTIMATED AT A GENERAL 8% LOSS OF SECTION THROUGHOUT THE STRUCTURE EXCEPT WHERE FIELD INSPECTION INDICATES THE LOSS TO BE GREATER THAN 8%.

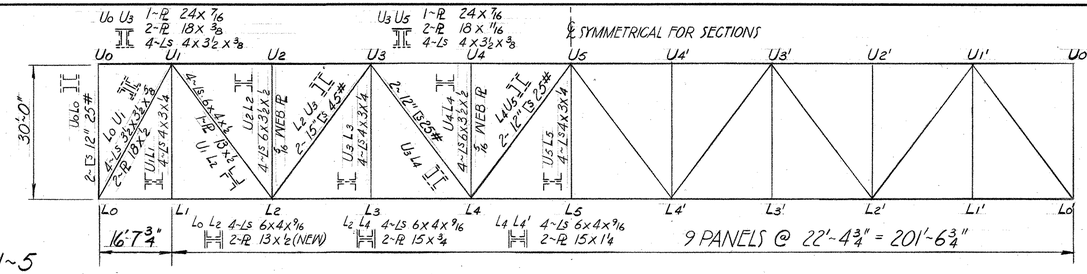

SPAN~5

STRESSES WITH 5" HALF-FILLED BRIDGE FLOORING

LOCATION		MEMBERS	STRESSES DL *	DL1 ①	LL *	I *	Σ1 DL+LL	AREAS □" NET An *	GROSS Ag *	LOSS (COR) ③	EFF. Ae	L/R *	ALLOW STRESS *	UNIT STRESS Σ1/Ae ③	% DL INCREASE (DL-DL①)/DL ×100	% ALLOWABLE STRESS	REINF'D AREA Ar	UNIT STRESS Σ1/Ar ③
TOP		U0 U1	0	0	0	0	-	-	34.68	2.78	31.9	.29	-14.72	-	-	-	-	-
		U1 U3	-186.5	-224.8	-126.3	-18.5	-369.6	-	34.68	2.78	31.9	.39	-14.50	-11.59	20.5	79.9	-	-
		U3 U5	-319.7	-357.2	-208.9	-29.8	-590.9	-	45.93	3.67	42.26	40	-14.47	-13.98	11.7	96.6	-	-
		U5 U3'	-332.5	-365.6	-208.6	-30.5	-604.7	-	45.93	3.67	42.26	40	-14.47	-14.31	9.9	98.9	-	-
		U3' U1'	-211.3	-242.9	-140.7	-20.5	-404.1	-	34.68	2.78	31.9	39	-14.50	-12.67	14.9	87.4	-	-
		U1' U0'	0	0	0	0	-	-	34.68	2.78	31.9	39	-14.50	-	-	-	-	-
BOTTOM		L0 L2	+87.8	+105.0	+60.9	+8.9	+174.8	15.61	21.24	4.5	11.11	-	+18.0	+15.73	19.6	87.4	24.11	7.25
		L2 L4	+264.1	+307.6	+174.3	+25.4	+507.3	33.93	43.74	2.72	31.21	-	+18.0	+16.25	16.5	90.3	-	-
		L4 L4'	+343.6	+398.2	+214.7	+31.4	+624.3	45.93	58.74	3.67	42.26	-	+18.0	+14.77	10.1	82.0	-	-
		L4' L2'	+285.6	+319.4	+183.6	+26.8	+529.8	33.93	43.74	2.72	31.21	-	+18.0	+16.98	11.8	94.3	-	-
		L2' L0'	+116.0	+138.7	+79.4	+11.6	+229.7	15.61	21.24	4.5	11.11	-	+18.0	+20.68	19.6	114.9	24.11	9.55
DIAGONALS		L0 U1	-179.0	-218.5	-135.2	-19.7	-373.4	-	33.92	2.71	31.21	51	-14.13	-11.96	22.1	84.6	-	-
		U1 L2	+164.0	+193.3	+124.4	+19.0	+336.7	19.50	25.50	1.56	17.94	-	+18.0	+18.77	17.9	104.3	-	-
					-4.3	-1.3												
		L2 U3	-129.6	-137.9	-99.4	-16.4	-253.7	-	26.34	2.11	24.23	85	-12.60	-10.47	6.4	83.1	-	-
					+15.4	+4.6												
		U3 L4	+93.0	+84.0	+79.1	+14.2	+178.3	11.93	14.64	0.96	10.97	-	+18.0	+16.16	-9.7	89.8	-	-
					-26.5	-6.9												
		L4 U5	-40.0	-33.6	-58.5	-11.7	-103.8	-	14.64	1.18	13.46	105	-11.33	-7.71	-18.5	68.0	-	-
					+38.9	+9.0												
		U5 L4'	-18.6	-23.1	-51.2	-10.6	-84.9	-	14.64	1.18	13.46	105	-11.33	-6.31	24.2	55.7	-	-
					+40.9	+9.0												
		L4' U3'	+78.4	+73.5	+71.5	+13.4	+158.4	11.93	14.64	0.96	10.97	-	+18.0	+14.44	-6.2	80.2	-	-
					-27.4	-6.8												
		U3' L2'	-124.5	-126.0	-92.9	-16.0	-234.9	-	26.34	2.11	24.23	85	-12.60	-9.69	1.2	76.9	-	-
					+15.1	+4.3												
		L2' U1'	+159.6	+176.5	+114.8	+18.2	+309.5	19.50	25.50	1.56	17.94	-	+18.0	+17.3	10.6	95.8	-	-
					-2.8	-0.8												
		U1' L0'	-193.0	-233.2	-144.9	-21.1	-399.2	-	33.92	2.71	31.21	67	-13.50	-12.79	20.8	94.7	-	-
VERTICALS		U0 L0	-15.2	-15.6	-47.6	-14.3	-77.5	-	14.64	1.17	13.47	81	-12.80	-5.98	2.6	44.9	-	-
		STRUTS	-37.1	-42.0	-63.6	-18.7	-124.3	-	22.97	1.84	21.13	138	-8.70	-5.88	13.2	67.6	-	-
		HANGERS	+5.9	+5.9	0.0	0.0	+5.9	7.67	9.92	0.61	7.06	-	+18.0	+0.84	0.0	4.6	-	-
		U6' L0'	-21.5	-21.0	-53.5	-16.1	-90.6	-	14.64	1.17	13.47	81	-12.80	-6.7	-2.3	52.5	-	-

STRESSES WITH ADDITION OF 3" FUTURE WEARING SURFACE

MEMBERS	STRESSES DL2 FWS ②	Σ2 Σ1+DL2	UNIT③ STRESS Σ2/Ar or Ae	% ALLOWABLE STRESS
U0 U1	0	-	-	-
U1 U3	- 43.6	- 413.2	- 12.95	89.3
U3 U5	- 69.0	- 660.2	-15.62	107.9
U5 U3'	- 70.9	- 673.6	-15.98	110.4
U3' U1'	- 47.1	- 451.2	- 14.14	97.5
U1' U0'	0	-	-	-
L0 L2	+ 20.4	+ 195.2	+ 8.09	44.0
L2 L4	+ 59.7	+ 567.0	+ 18.17	100.9
L4 L4'	+ 73.4	+ 697.7	+ 16.51	91.7
L4' L2'	+ 62.0	+ 591.8	+ 18.96	105.3
L2' L0'	+ 26.9	+ 256.6	+ 10.64	59.1
L0 U1	- 42.4	- 415.8	- 13.32	94.2
U1 L2	+ 37.5	+ 374.2	+ 20.86	115.9
L2 U3	- 26.8	- 280.5	- 11.58	91.3
U3 L4	+ 16.3	+ 193.6	+ 17.65	98.6
L4 U5	- 6.5	- 110.3	- 8.19	72.3
U5 L4'	- 4.5	- 89.4	- 6.64	58.6
L4' U3'	+ 14.3	+ 172.7	+ 15.74	87.4
U3' L2'	- 24.4	- 259.3	- 10.70	84.9
L2' U1'	+ 34.2	+ 343.7	+ 19.16	106.4
U1' L0'	- 45.2	- 444.4	- 14.24	105.5
U0 L0	- 3.1	- 81.2	- 6.03	46.7
STRUTS	- 8.1	- 132.4	- 6.27	72.0
HANGERS	0	+ 5.9	+ 0.84	4.6
U6' L0'	- 4.1	- 94.7	- 7.03	54.9

Mark	Description	By	Chk'd.	App'd.	Date
REVISIONS					

Commonwealth of Pennsylvania
DEPARTMENT OF TRANSPORTATION
BUREAU OF DESIGN

BEAVER COUNTY
L.R. 04017 SEC. 6 STA. 49 + 74

REHABILITATION OF THE KOPPEL BRIDGE

OVER THE
P. & L.E. R.R., PENN CENTRAL R.R. & BEAVER RIVER

STRESS SHEET

APPROVED MAR 9 1976
B.Z. Katalil
BRIDGE ENGINEER
0021082

SHEET 30 OF 33

S-11862

K&E 19 1153 9-73 W2711•

7530-2350-0200

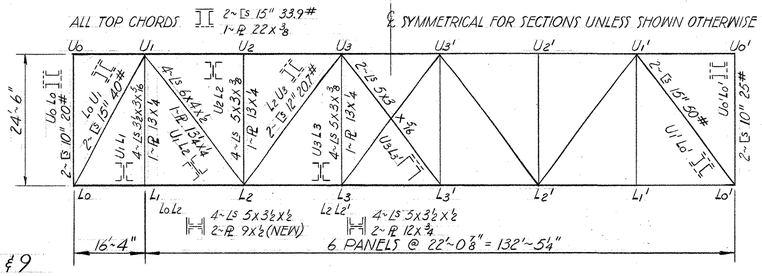

SPANS ~ 6, 7, 8 & 9

STRESSES WITH 5" HALF-FILLED BRIDGE FLOORING

	MEMBERS	STRESSES DL *	DL1 ①	LL *	I *	Σ1 DL+LL	AREAS □" NET An *	GROSS Ag *	LOSS (CORR) ⑤	EFF. Ae	L/R *	ALLOW STRESS *	UNIT STRESS Σ1/Ae ③	%DL INCREASE (DL-D)/D x100	% ALLOWABLE STRESS	REINF'D AREA Ar	UNIT STRESS Σ1/Ar ③
TOP	U0 U1	0.0	0.0	0.0	0.0	0.0	-	28.05	2.25	25.8	30	-14.7	-	-	-	-	-
	U1 U3	-99.0	-134.0	-102.7	-18.8	-255.5	-	28.05	2.25	25.8	47	-14.27	-9.9	35.4	69.0	-	-
	U3 U3'	-125.6	-170.0	-130.1	-23.9	-324.6	-	28.05	2.25	25.8	47	-14.27	-12.58	35.4	88.0	-	-
	U3' U1'	-107.0	-144.8	-111.9	-20.4	-277.1	-	28.05	2.25	25.8	47	-14.27	-10.74	35.4	75.3	-	-
	U1' U0'	0.0	0.0	0.0	0.0	0.0	-	28.05	2.25	25.8	53	-14.1	-	35.4	-	-	-
BOTTOM	L0 L2	+51.1	+69.2	+52.4	+9.6	+131.2	12.0	16.0	1.75	10.75	-	+18.0	+12.8	35.4	71.0	19.25	+6.81
	L2 L3	+124.2	+168.2	+129.5	+23.6	+321.3	27.0	34.0	2.16	24.50	-	+18.0	+13.11	35.4	72.0	-	-
	L3 L3'	+125.6	+170.0	+130.7	+23.9	+324.6	27.0	34.0	2.16	24.50	-	+18.0	+13.23	35.4	72.6	-	-
	L3' L2'	+127.0	+172.0	+132.3	+24.2	+328.5	27.0	34.0	2.16	24.50	-	+18.0	+13.41	35.4	73.5	-	-
	L2' L0'	+64.5	+87.3	+67.9	+12.4	+167.6	12.0	16.0	1.75	10.25	-	+18.0	+16.35	35.4	90.8	19.25	+8.71
LOCATION DIAGONALS	L0 U1	-92.0	-124.6	-105.9	-19.4	-248.9	-	23.4	1.83	21.53	62	-13.72	-11.6	35.4	84.6	-	-
	U1 L2	+71.5	+101.7	+91.7	+17.9	+211.3	17.81	23.31	1.43	16.38	-	+18.0	+12.9	35.4	71.7	-	-
				-6.6	-2.0												
	L2 U3	-37.9	-51.3	-65.4	-14.1	-130.8	-	12.06	0.96	11.10	86	-12.53	-11.78	35.4	93.0	-	-
				+24.9	+7.5												
	U3 L3'	+2.0	+2.7	+22.9	+5.9	+31.5	3.55	4.80	0.29	3.26	-	+18.0	+9.66	35.4	53.7	-	-
				-20.2	-5.2			4.80	0.39	4.41	123	-9.95					
	U3' L3	-2.0	-2.7	-22.9	-5.9	-31.5	-	4.80	0.39	4.41	123	-9.95	-7.14	35.4	71.8	-	-
				+20.2	+5.2		3.55	4.80	0.29	3.26		+18.0					
	U3' L2'	-29.8	-40.3	-63.1	-15.1	-118.5	-	12.06	0.96	11.1	86	-12.53	-10.67	35.4	85.2	-	-
				+26.4	+7.4												
	L2' U1'	+63.5	+86.0	+82.9	+16.8	+185.7	17.81	23.31	1.43	16.38	-	+18.0	+11.34	35.4	63.0	-	-
				-6.7	-2.1												
	U1' L0'	-96.8	-131.0	-113.9	-20.8	-265.8	-	29.28	2.35	26.93	80	-12.9	-9.87	35.4	76.5	-	-
VERTICALS	U0 L0	-14.5	-19.6	-43.0	-12.9	-75.5	-	11.72	0.94	10.78	81	-12.8	-7.0	35.4	54.7	-	-
	U1 L1	+2.7	+3.7	0.0	0.0	-	8.41	10.97	0.67	7.74	-	+18.0	-	35.4	-	-	-
	POST	-18.2	-24.6	-62.7	-18.8	-106.1	-	14.69	1.18	13.51	137	-8.7	-7.87	35.4	90.5	-	-
	U2 L3	+7.6	+10.3	+17.7	+4.3	+32.3	11.68	14.69	0.94	10.74	-	+18.0	+3.0	35.4	16.3	-	-
				-14.5	-3.6			14.69	1.18	13.51	137	-8.7					
	U3' L3'	-2.2	-3.0	-17.7	-4.3	-25.0	-	14.69	1.18	13.51	137	-8.7	-1.85	35.4	21.3	-	-
				+14.5	+3.6		11.68	14.69	0.94	10.74		+18.0					
	U1' L1'	+2.8	+3.8	0.0	0.0	+3.8	8.41	10.97	0.67	7.74	-	+18.0	+0.5	35.4	-	-	-
	U0' L0'	-21.1	-28.6	-60.6	-18.2	-107.4	-	14.64	1.17	13.47	84	-12.65	-7.99	35.4	57.9	-	-

STRESSES WITH ADDITION OF 3" FUTURE WEARING SURFACE

	MEMBERS	STRESSES DL2 FWS ②	Σ2 Σ1 + DL2	③UNIT STRESS Σ2/Ar or Ae	% ALLOWABLE STRESS
TOP	U0 U1	0.0	0.0	-	-
	U1 U3	-29.3	-284.8	-11.0	77.0
	U3 U3'	-37.2	-361.8	-14.2	99.5
	U3' U1'	-31.7	-308.8	-11.96	83.8
	U1' U0'	0.0	0.0	-	-
BOTTOM	L0 L2	+15.1	+146.3	+7.6	42.2
	L2 L3	+36.8	+358.1	+14.61	80.1
	L3 L3'	+37.2	+361.8	+14.76	80.9
	L3' L2'	+37.6	+366.1	+14.94	81.8
	L2' L0'	+19.1	+186.7	+9.70	53.9
LOCATION DIAGONALS	L0 U1	-27.2	-277.1	-12.9	94.0
	U1 L2	+22.2	+233.5	+14.3	79.5
	L2 U3	-11.2	-142.0	-12.8	101.2
	U3 L3'	+0.6	+32.1	+9.85	54.7
	U3' L3	-0.6	-32.1	-9.85	99.0
	U3' L2'	-8.82	-127.3	-11.45	91.4
	L2' U1'	+18.8	+204.5	+12.50	69.0
	U1' L0'	-28.7	-294.5	-10.94	84.8
VERTICALS	U0 L0	-4.3	-79.8	-7.40	57.8
	U1 L1	+0.8	-	-	-
	POST	-5.4	-111.5	-8.27	95.0
	U2 L3	+2.2	+34.5	+3.21	17.8
	U3' L3'	-0.7	-25.7	-1.90	21.5
	U1' L1'	+0.8	+4.6	+0.6	-
	U0' L0'	-6.3	-113.6	-8.43	61.4

NOTE
STRESSES SHOWN ARE FOR UP-STREAM TRUSS

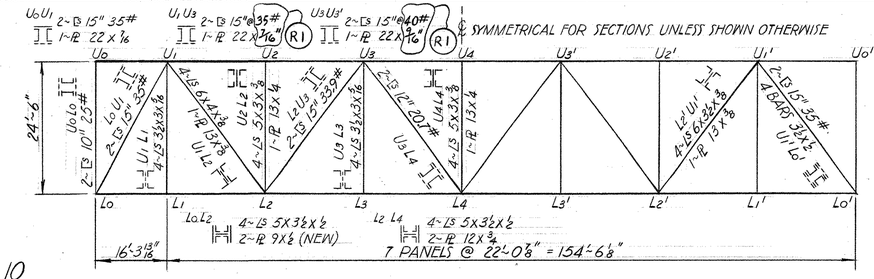

SPAN ~ 10

STRESSES WITH 5" HALF-FILLED BRIDGE FLOORING

	MEMBERS	STRESSES DL *	DL1 ①	LL *	I *	Σ1 DL+LL	AREAS □" NET An *	GROSS Ag *	LOSS (CORR) ⑤	EFF. Ae	L/R *	ALLOW STRESS *	UNIT STRESS Σ1/Ae ③	%DL INCREASE (DL-D)/D x100	% ALLOWABLE STRESS	REINF'D AREA Ar	UNIT STRESS Σ1/Ar ③
TOP	U0 U1	0.0	0.0	0.0	0.0	0.0	-	30.08	2.41	27.67	30	-14.8	-	-	-	-	-
	U1 U3	-157.2	-183.5	-119.2	-20.3	-323.0	-	30.08	2.41	27.67	48	-14.23	-11.67	16.7	82.0	-	-
	U3 U3'	-216.0	-263.0	-169.7	-28.8	-461.5	-	35.78	2.41	27.67	48	-14.23	-14.02	21.8	98.5	-	-
	U3' U1'	-162.7	-201.3	-130.2	-22.2	-353.7	-	30.08	2.41	27.67	48	-14.23	-12.78	23.7	89.8	-	-
	U1' U0'	0.0	0.0	0.0	0.0	0.0	-	30.08	2.41	27.67	50	-14.17	-	-	-	-	-
BOTTOM	L0 L2	+76.4	+94.5	+59.1	+10.1	+163.7	12	16.0	0.96	10.25	-	+18.0	+15.97	23.7	88.7	19.25	+8.50
	L2 L4	+204.0	+242.2	+136.0	+26.5	+424.7	27	34.0	2.16	24.50	-	+18.0	+17.33	18.8	96.3	-	-
	L4 L2'	+202.0	+249.7	+162.2	+27.6	+439.5	27	34.0	2.16	24.50	-	+18.0	+17.94	23.6	99.7	-	-
	L2' L0'	+93.0	+121.1	+76.6	+13.0	+210.7	12	16.0	0.96	10.25	-	+18.0	+20.56	30.2	114.2	19.25	+10.94
LOCATION DIAGONALS	L0 U1	-137.4	-162.7	-117.9	-20.1	-300.1	-	20.46	1.64	18.82	61	-13.72	-13.98	18.4	116.5	-	-
	U1 L2	+121.0	+132.4	+105.4	+18.9	+256.7	15.06	19.31	1.20	13.86	-	+18.0	+18.52	9.4	102.9	-	-
				-4.6	-1.4	-126.4											
	L2 U3	-69.6	-83.2	-78.2	-13.8	-175.2	-	19.8	1.59	18.21	71	-13.32	-9.62	19.5	71.8	-	-
				+21.3	+6.4												
	U3 L4	+17.9	+30.3	+56.0	+12.2	+98.5	10.1	12.06	0.81	9.29	-	+18.0	+10.6	69.3	58.9	-	-
				-37.7	-9.8												
	L4 U3'	+20.4	+20.8	+54.9	+12.6	+188.3	10.1	12.06	0.81	9.29	-	+18.0	+9.5	2.0	52.8	-	-
				-39.1	-9.7												
	U3' L2'	-59.0	-70.0	-70.9	-14.6	-155.5	-	19.8	1.59	18.21	71	-13.32	-8.54	18.6	64.1	-	-
				+24.3	+6.9												
	L2' U1'	+104.0	+121.1	+97.3	+18.3	+236.7	14.06	18.56	1.13	12.93	-	+18.0	+18.31	16.4	101.7	-	-
				-5.8	-1.7												
	U1' L0'	-138.6	-176.0	-127.6	-21.7	-325.3	-	27.46	2.20	25.26	76	-13.07	-12.88	27.0	98.5	-	-
VERTICALS	U0 L0	-14.2	-14.0	-43.0	-12.9	-69.9	-	14.64	1.18	13.46	84	-12.65	-5.19	-1.4	41.0	-	-
	U1 L1	+2.4	0.0	-	-		5.55	7.72	0.39	5.16	-	+18.0				-	-
	U2 L2	-30.3	-37.8	-62.7	-18.8	-119.3	-	14.69	1.23	13.46	137	-8.7	-8.86	24.8	101.8	-	-
	U3 L3	+4.4	0.0	-	-		5.55	7.72	0.39	5.16	-	+18.0				-	-
	U4 L4	-20.6	-37.8	-62.7	-18.8	-119.3	-	14.69	1.23	13.46	137	-8.7	-8.86	83.5	101.8	-	-
	U3' L3'	+4.4	0.0	-	-		5.55	7.72	0.39	5.16	-	+18.0				-	-
	U2' L2'	-25.6	-37.8	-62.7	-18.8	-119.3	-	14.69	1.23	13.46	137	-8.7	-8.86	47.7	101.8	-	-
	U1' L1'	+2.8	0.0	-	-		5.55	7.72	0.39	5.16	-	+18.0				-	-
	U0' L0'	-22.7	-18.9	-63.2	-19.0	-101.1	-	14.64	1.18	13.46	84	-12.65	-7.51	-20.1	59.4	-	-

STRESSES WITH ADDITION OF 3" FUTURE WEARING SURFACE

	MEMBERS	STRESSES DL2 FWS ②	Σ2 Σ1 + DL2	③UNIT STRESS Σ2/Ar or Ae	% ALLOWABLE STRESS
TOP	U0 U1	0.0	0.0	-	-
	U1 U3	-38.7	-361.7	-13.07	91.8
	U3 U3'	-55.3	-517.0	-15.71	110.4
	U3' U1'	-42.5	-396.2	-14.32	100.6
	U1' U0'	0.0	0.0	-	-
BOTTOM	L0 L2	+19.9	+183.6	+9.54	53.0
	L2 L4	+51.1	+475.8	+19.42	107.9
	L4 L2'	+52.7	+492.2	+20.09	111.6
	L2' L0'	+25.6	+235.9	+12.25	68.0
LOCATION DIAGONALS	L0 U1	-34.3	-335.0	-17.8	129.7
	U1 L2	+27.9	+284.6	+20.53	114.1
	L2 U3	-17.6	-192.8	-10.59	79.5
	U3 L4	+6.4	+104.9	+11.29	62.7
	L4 U3'	+4.4	+92.7	+9.98	55.4
	U3' L2'	-14.8	-170.3	-9.35	70.2
	L2' U1'	+25.6	+262.3	+20.29	112.7
	U1' L0'	-37.1	-362.4	-14.35	109.8
VERTICALS	U0 L0	-3.0	-72.9	-5.42	42.8
	U1 L1				
	U2 L2	-8.0	-127.3	-9.46	108.7
	U3 L3				
	U4 L4	-8.0	-127.3	-9.46	108.7
	U3' L3'				
	U2' L2'	-8.0	-127.3	-9.46	108.7
	U1' L1'				
	U0' L0'	-4.0	-105.1	-7.81	61.7

NOTE
FOR GENERAL NOTES SEE SHEET 30.

Mark	Description	By	Chk'd.	App'd.	Date
R1	REVISED TOP CHORD SECTION REF. SPAN NO. 10 PANELS U1-U1'	M.G.	M.P.F.	N.H.U.	8-19-76
REVISIONS					

Commonwealth of Pennsylvania
DEPARTMENT OF TRANSPORTATION
BUREAU OF DESIGN

BEAVER COUNTY
L.R. 04017 SEC. 6 STA. 49 + 74
REHABILITATION OF THE KOPPEL BRIDGE
OVER THE
P. & L.E. R.R., PENN CENTRAL R.R. & BEAVER RIVER
STRESS SHEET

APPROVED MAR 9 1976
B.J. Kotalik
BRIDGE ENGINEER
00210 83

SHEET 31 OF 33
S-11862

K&E 19 1153 9-73 W2711+

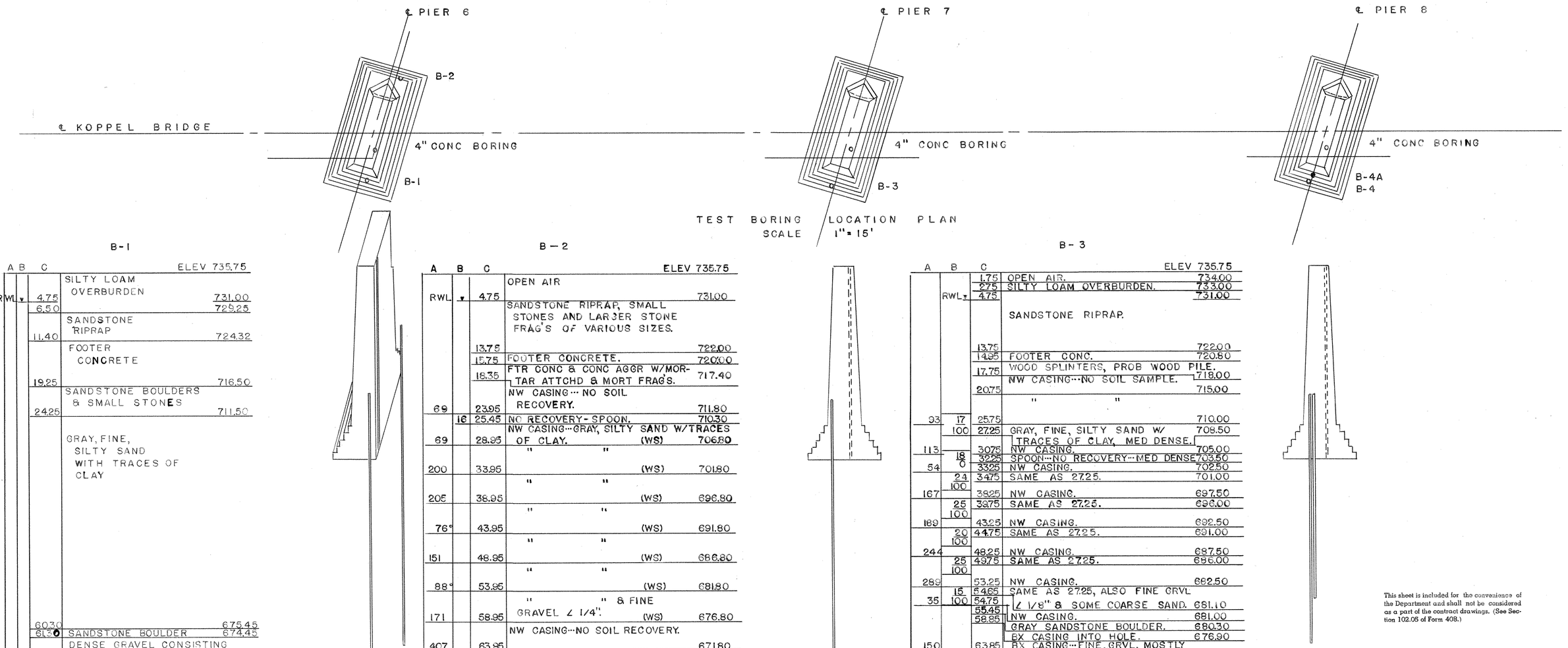

TEST BORING LOCATION PLAN
SCALE 1" = 15'

B-1

ELEV 735.75

A	B	C		
			SILTY LOAM OVERBURDEN	
RWL ▼		4.75		731.00
		6.50		725.25
			SANDSTONE RIPRAP	
		11.40		724.32
			FOOTER CONCRETE	
		19.25		716.50
			SANDSTONE BOULDERS & SMALL STONES	
		24.25		711.50
			GRAY, FINE, SILTY SAND WITH TRACES OF CLAY	
		60.30		675.45
		61.30	SANDSTONE BOULDER	674.45
			DENSE GRAVEL CONSISTING OF SMALL STONES AND STONE FRAGS W/ TRACES OF COARSE SAND PART. MOSTLY ALL ELEMENTS ∠ THAN 1" W/ MAJORITY ∠ 1/2". BOULDERS INTERSPERSED W/I GRAVEL LAYER.	
		86.50		649.25
			GRAY, BLACK SHALE STRATUM W/ FEW MINOR CLAY SEAMS IN THE UPPER LEVEL.	
		96.00		639.75

BORING TERMINATED

B-2

ELEV 735.75

A	B	C		
			OPEN AIR	
RWL ▼		4.75		731.00
			SANDSTONE RIPRAP, SMALL STONES AND LARGER STONE FRAG'S OF VARIOUS SIZES.	
		13.75		722.00
		15.75	FOOTER CONCRETE.	720.00
		18.35	FTR CONC & CONC AGGR W/MORTAR ATTCHD & MORT FRAG'S.	717.40
			NW CASING··· NO SOIL	
69		23.95	RECOVERY.	711.80
	16	25.45	NO RECOVERY - SPOON.	710.30
			NW CASING···GRAY, SILTY SAND W/TRACES	
69		28.95	OF CLAY. (WS)	706.80
			" "	
200		33.95	(WS)	701.80
			" "	
205		38.95	(WS)	696.80
			" "	
76°		43.95	(WS)	691.80
			" "	
151		48.95	(WS)	686.80
			" "	
88°		53.95	(WS)	681.80
			" " & FINE	
171		58.95	GRAVEL ∠ 1/4". (WS)	676.80
			NW CASING···NO SOIL RECOVERY.	
407		63.95		671.80
201°		65.15	" "	670.60
	50	65.90	SPOON···NO RECOVERY.	669.85
		67.00	GRAY SANDSTONE BOULDER.	668.75
201°		70.15	BX CASING···FINE GRVL, MOSTLY	665.60
		71.25	∠ 1/2" SIZE. (WS)	664.50
			SANDSTONE BOULDER.	
215°		75.15	SAME AS 70.15. (WS)	660.60
		76.05	SANDSTONE BOULDER.	659.70
256°		80.15	SAME AS 70.15. (WS)	655.60
		81.25	SANDSTONE BOULDER.	654.50
394°		84.25	SAME AS 70.15. (WS)	651.50
		84.55	SANDSTONE BOULDER.	651.20
			GRAY, BLACK SHALE STRATUM.	
		93.30		642.45
			GRAY, BLACK SHALE STRATUM.	
		107.40		628.35

BORING TERMINATED

B-3

ELEV 735.75

A	B	C		
		1.75	OPEN AIR.	734.00
		2.75	SILTY LOAM OVERBURDEN.	733.00
RWL ▼		4.75		731.00
			SANDSTONE RIPRAP.	
		13.75		722.00
		14.95	FOOTER CONC.	720.80
		17.75	WOOD SPLINTERS, PROB WOOD PILE.	718.00
			NW CASING···NO SOIL SAMPLE.	
		20.75		715.00
			" "	
93	17	25.75		710.00
	100	27.25	GRAY, FINE, SILTY SAND W/ TRACES OF CLAY, MED DENSE.	708.50
113		30.75	NW CASING.	705.00
	18	32.25	SPOON···NO RECOVERY···MED DENSE	703.50
54	0	33.25	NW CASING.	702.50
	24	34.75	SAME AS 27.25.	701.00
	100			
167		38.25	NW CASING.	697.50
	25	39.75	SAME AS 27.25.	696.00
	100			
189		43.25	NW CASING.	692.50
	20	44.75	SAME AS 27.25.	691.00
	100			
244		48.25	NW CASING.	687.50
	25	49.75	SAME AS 27.25.	686.00
	100			
289		53.25	NW CASING.	682.50
	15	54.65	SAME AS 27.25, ALSO FINE GRVL	
35	100	54.75	∠ 1/8" & SOME COARSE SAND.	681.10
		55.45	NW CASING.	681.00
		58.85	GRAY SANDSTONE BOULDER.	680.30
			BX CASING INTO HOLE.	676.90
150		63.85	BX CASING···FINE GRVL, MOSTLY	
	60	64.55	1/2" & LESS W/PARTICLES OF	
	0		COARSE SAND. (WS)	671.90
376		68.85	NO RECOVERY···VERY DENSE	671.20
35°		70.35	BX CASING.	666.90
		70.55	" " NO SAMPLE.	665.40
251°		73.85	SANDSTONE BOULDER.	665.20
			BX CASING···FINE GRVL, MOSTLY 1/2" & SMALLER. (WS)	661.90
314°		78.85	SAME AS 73.85. (WS)	656.90
			BX CASING TO REFUSAL.	
328°		83.85		651.90
			SANDSTONE BOULDERS.	
		86.55		649.20
			GRAY, BLACK SHALE STRATUM W/MANY CLAY SEAMS. LARGE PORTIONS OF CORE SAMPLES EASILY FRAGMENTIZE.	
		98.45		637.30

BORING TERMINATED

This sheet is included for the convenience of the Department and shall not be considered as a part of the contract drawings. (See Section 102.05 of Form 408.)

Mark	Description	By	Chk'd.	App'd.	Date
REVISIONS					

Commonwealth of Pennsylvania
DEPARTMENT OF TRANSPORTATION
BUREAU OF DESIGN

BEAVER COUNTY
L.R. 04017 SEC. 6 STA. 49 + 74

REHABILITATION OF THE KOPPEL BRIDGE
OVER THE
P. & L.E. R.R., PENN CENTRAL R.R. & BEAVER RIVER
CORE BORINGS

APPROVED _____
BRIDGE ENGINEER

0021084

SHEET 32 OF 33

S-11862

B-4

A	B	C		ELEV 735.75
		0.25	OPEN AIR.	735.50
		2.75	SILTY LOAM OVERBURDEN.	733.00
	RWL ▼	4.75		731.00
		12.25	SANDSTONE RIPRAP.	723.50
		14.35	NW CASING & CLEAN HOLE.	721.40
		19.95	WOOD, PROBABLE PILE.	715.80
		24.65	NO RECOVERY, POSSIBLE VERY LOOSE SILT W/SAND.	711.10

BORING TERMINATED,
SEE B-4A.

B-4A

A	B	C		ELEV 735.75
			SEE B-4 FOR UPPER LEVEL DATA.	
25°		25.65	BX CASING.	710.10
49		30.65	BX CASING.	705.10
	40	32.15	FINE, BROWN GRAY, SILTY SAND W/TRACES OF CLAY. DENSE.	703.60
90		35.65	BX CASING.	700.10
	25	37.15	GRAY, FINE, SILT W/TRACES OF FINE SAND & CLAY. MED	
135		40.65	DENSE.	698.60
	35	42.15	BX CASING.	695.10
221		45.65	GRAY, FINE, SILTY SAND W/TRACES OF CLAY. DENSE.	693.60
	36	47.15	BX CASING.	690.10
226		47.35	SAME AS 32.15. DENSE.	688.60
32°		47.85	BX CASING, REAM & WASH.	688.40
		48.25	BX CASING.	687.90
308		50.25	SANDSTONE BOULDER.	687.50
86°		51.25	BX CASING.	685.50
		55.25	BX CASING TO REFUSAL.	684.50
		56.25	REAM & WASH··· GRAVEL, MOSTLY 1" & SMALLER.	680.50
			SANDSTONE BOULDERS.	679.50

BORING TERMINATED,
SEE CONTINUATION OF
B-4 AT RIGHT FOR
LOWER LEVEL DATA.

B-4 CONT'D

A	B	C		ELEV 735.75
			SEE B-4 & B-4A FOR UPPER LEVEL DATA.	
20°		55.25	BX CASING.	680.50
77°		60.25	BX CASING.	675.50
205		62.05	BX CASING.	673.70
		64.95	SANDSTONE BOULDER.	670.80
		68.95	GRAY, BLACK SHALE W/CLAY SEAMS, EASILY FRAGMEN-TIZED.	666.80
		73.95	" " "	661.80
		78.95	" " "	656.80

BORING TERMINATED.

L E G E N D

COLUMN 'A' HAMMER BLOWS ON CASINGS.
300 LBS X 60" DROP.

COLUMN 'B' HAMMER BLOWS ON SPOON SAMPLER.
140 LBS X 30" DROP.

COLUMN 'C' DEPTH OF LOWER LIMIT OF SPOON SAMPLE AND BOTTOM OF RUN.

RWL··· RIVER WATER LEVEL.

SPOON SAMPLER··· 2" OD X 24" SPLIT BARREL WITH AX CONNECTION.

°··· SOIL DISTURBED WITH FISH TAIL BIT REAMING AND WATER WASH PRIOR TO DRIVING CASING.

This sheet is included for the convenience of the Department and shall not be considered as a part of the contract drawings. (See Section 102.05 of Form 408.)

Commonwealth of Pennsylvania
DEPARTMENT OF TRANSPORTATION
BUREAU OF DESIGN

BEAVER COUNTY
L.R.04017 SEC. 6 STA. 49 + 74

REHABILITATION OF THE KOPPEL BRIDGE

OVER THE
P&L.E. R.R., PENN CENTRAL R.R. & BEAVER RIVER

CORE BORINGS

APPROVED _____
0021085
BRIDGE ENGINEER

SHEET 33 OF 33

S-11862