with lacing, and bottom chords are paired rectilinear eyebars. Verticals are two channels with cross lacing on each side except for the hip verticals which have small channels with lacing on one side. All panels contain paired rectilinear eyerods for diagonals except the center panels which have crossed single circular tie rods. The dimensions of the bridge were unavailable. Masonry abutments, concrete piers, and steel bents form the substructure.

The county built a new bridge nearby in 1962, and removed the approach spans and decking and bypassed this bridge. The truss remains intact.

(#85) 33-SR008-09.53: Market Street Bridge spanning the Tennessee River in downtown Chattanooga in Hamilton County (Chattanooga Quad, 105 SE).

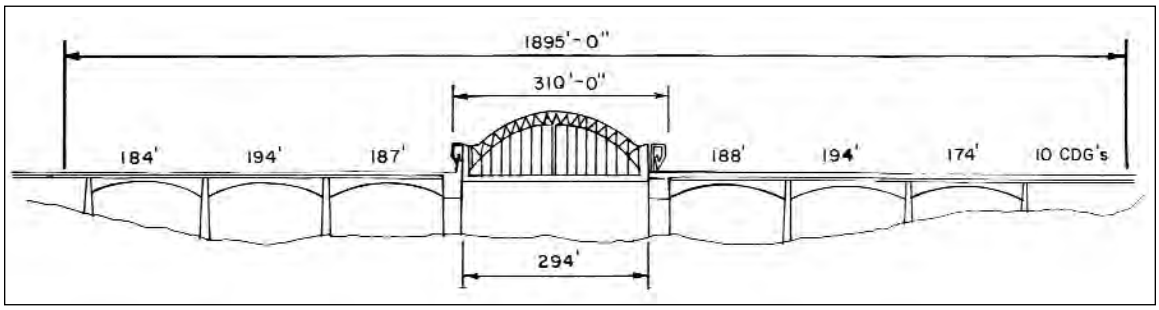

Significant under Criterion A for associations with Dixie Highway and for its role in local politics as well as under Criterion C as rare bascule lift bridge and for concrete arch spans.

The 1891 construction of the Walnut Street Bridge (#20, 33-03544-00.12) resulted in a building boom north of Chattanooga. By 1910 Hamilton County officials had decided to build a new downtown bridge. By 1911 a bridge committee had persuaded the state legislature to pass enabling legislation for the county to build such a bridge at Market Street. In 1913 the legislature authorized the county to pass a $500,000 bond issue for the bridge. The county court, under Judge Will Cummings, approved the funding at the January 1914 session. The court appointed a committee to let a contract and supervise the construction of the new bridge. Members of this bridge committee were; Theodore King, J. B. Ragon, H. F. Lawrence, J. Walter Cummings, and L. B. Bryan.

Although the project had its share of disagreements, the county firmly wanted a concrete bridge. The county apparently based its decision on maintenance problems with the Walnut Street Bridge that had experienced various small fires, as well as a serious fire in 1897 that nearly destroyed the bridge. However, from the earliest planning stages, the county knew that the War Department's clearance requirements (300-foot span, 100-feet above water) precluded a concrete river span. However, the county continued to debate the issue with the War Department. Ultimately, the county used a compromise bridge design of a central movable lift span flanked by concrete arches.

In early 1914, the bridge committee advertised nationally for engineers to submit plans for a bridge. An editorial in *Engineering News* criticized this approach, asserting that the county was treating this as it would a small bridge even though it was a major undertaking. From over a dozen engineers who presented plans, the county selected a design submitted by New Yorker Benjamin H. Davis, in part due to his reputation with concrete structures. Davis had worked for four years with the engineering department of the Delaware, Lackawanna and Western Railroad. There he designed the Delaware River Viaduct in Pennsylvania and the Paulius Kill Viaduct in New York, both concrete bridges about 2,500 feet long. As a private engineer he had designed several large concrete bridges in the northeast United States. The county later hired Davis as the consulting engineer but, after a controversy over cost overruns, replaced him with J. E. Griner of Baltimore. The county hired Ellis Soper of Chattanooga and W. C. Spiker of Atlanta as construction engineers. In the following months, Vang Construction Company of Maryland erected the concrete spans, the Scherzer Rolling Lift Bridge Company of Chicago designed the lift span, and the Toledo Bridge and Crane Company erected the steel span.

Construction crews encountered several difficulties. High waters repeatedly delayed work, and in December 1915, despite extensive work by Vang, one span with falsework and forms washed away. However, a far more critical problem was the discovery of serious foundation problems that were a prime factor in increasing the project cost to $1.1 million. The county blamed this cost overrun on Davis and fired him. Davis sued in federal court. At his trial, Davis testified that he had built more large concrete bridges and viaducts than any other living American engineer except for one. In 1920, the jury exonerated Davis and awarded him damages (Chattanooga Library, Clipping File, Market Street Bridge; *Engineering News* 1914). These cost overruns were also a major factor in the 1918 election defeat (by less than 100 votes) of the regionally significant Democrat, Judge Will Cummings. Cummings had led the fight for the new bridge and was considered, for better or worse, the "individual, living or dead [most] responsible for the completion of the bridge and its construction" (Hixson 1962:59).

Dedicated 17 November 1917, the Market Street Bridge was a major engineering achievement (Wilson 1980:332). The main channel span was a 310-foot double leaf bascule lift bridge that

was then the longest span of its type in the country. Today it is considered the third largest span of its type in the world (Encyclopedia 1979). The span opens in the middle and a 25-horsepower motor raises each leaf. In theory, it is balanced so well that the motors simply start the process and the counter weights (the large concrete blocks on each end) pull it the rest of the way (similar to the way a see saw functions). Six substantial concrete arch spans flank the lift span. When completed, local papers called it the largest concrete bridge in the South. Until the state rebuilt the Wauhatchie Pike route (State Route 2/U.S. 41) from Jasper to Chattanooga between 1933 and 1935, the Market Street Bridge was on the main north-south route in this region, both the Eastern and Western Divisions of the Dixie Highway, as well as U.S. 41.

Overall, excluding the southern concrete approach, the bridge is 1,895 feet long. Beginning on the south end, there are three arch spans at 184, 194, and 187 feet long, then the 310-foot lift span, three more arches 188, 194, and 174 feet long, and then ten concrete deck girders. The bridge carries three traffic lanes (a reversible lane replacing the old streetcar line) within a curb-to-curb width of 36 feet. Bronze light posts, which cost $3,934 in 1917, remain. There are also four pylons. Each pier has nosings under a tapering pilaster leading to the deck. Each arch ring contains a radiating voussoir pattern, a rare decorative feature in the state. The railing has a concrete spindle design.

Nicknamed the Million Dollar Bridge when built, the structure's official name was the Market Street Bridge. However, in 1950, the county court voted to change the name to the Chief John Ross Bridge, in honor of a Cherokee Chief who had settled Ross's Landing, which contained a ferry, warehouse, and landing that originally served as a trading center for both Cherokees and Euro-Americans. Ross's Landing would also serve as a disembarkation point for the Cherokee during the Trail of Tears in 1838, the same year that the community took the name of Chattanooga. The bridge is located adjacent to the National Register listed site of Ross's Landing. However, it is still commonly referred to as the Market Street Bridge. The bridge was renovated in 2007.